MALVERN DOVE GREY / BLACK / CREAM / CLASSIC CREAM WIDE TV

928939 / 850693 / 258626 / 681644 / 208000

Assembly instructions

Actual product size

H55 x W142 x D40cm

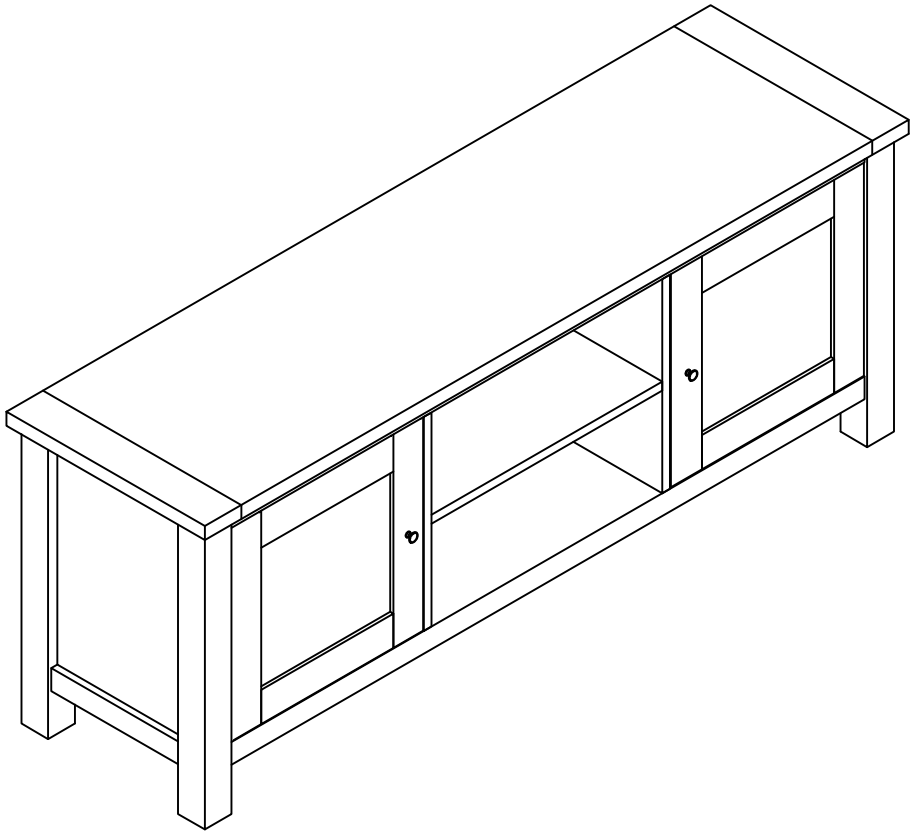

Need Help ?

With: Assembly instruction

Missing or damaged parts

IMPORTANT - RETAIN FOR FUTURE REFERENCE

CALL: 0333 777 8999

Produced in China for Next Retail Ltd.
928939 / 850693 / 258626 / 681644 / 208000-2020-V1.

BEFORE YOU START

Number of people required to assemble

Two people are required to assemble this item

Time to assemble : 30 minutes

Tools required

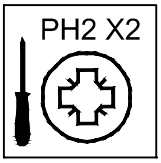

not supplied

Do's

We suggest you spend a short time reading through this leaflet before you start.

When you are ready to start, make sure that you have the right tools and plenty of space.

Unwrap all packaging materials and place the components on a clean surface to protect it from damage,
We recommend that the packaging is used to protect the surfaces during assembly.

Carefully check that you have all the parts before beginning assembly.

Due to the size of this product we recomement that it is assembled in the room intended for use.

Ensure the product is fully assembled as illustrated and all fixings fully tightened before use.

Wipe occasionally with a soft cloth slightly dampened with water. Then buff with a dry clean soft cloth.

Wood will mellow and change colour over time, we recommend that ornaments and items placed on the surface are moved regularly for the first few months to prevent uneven mellowing.

Don'ts

Do not drag or pull your furniture.

Do not rub or scrub the surface when cleaning.

Do not use silicone based furniture polish. Silicone in furniture polishes can break down the finish.

Never allow any kind of liquid to remain on your furniture.
Absorption can cause wood to warp or finishes to de-laminate.

Do not place hot items (e.g. hot drinks) directly on to the wood surface. Please make sure you use a placemat or coaster.

GETTING TO KNOW YOUR PRODUCT

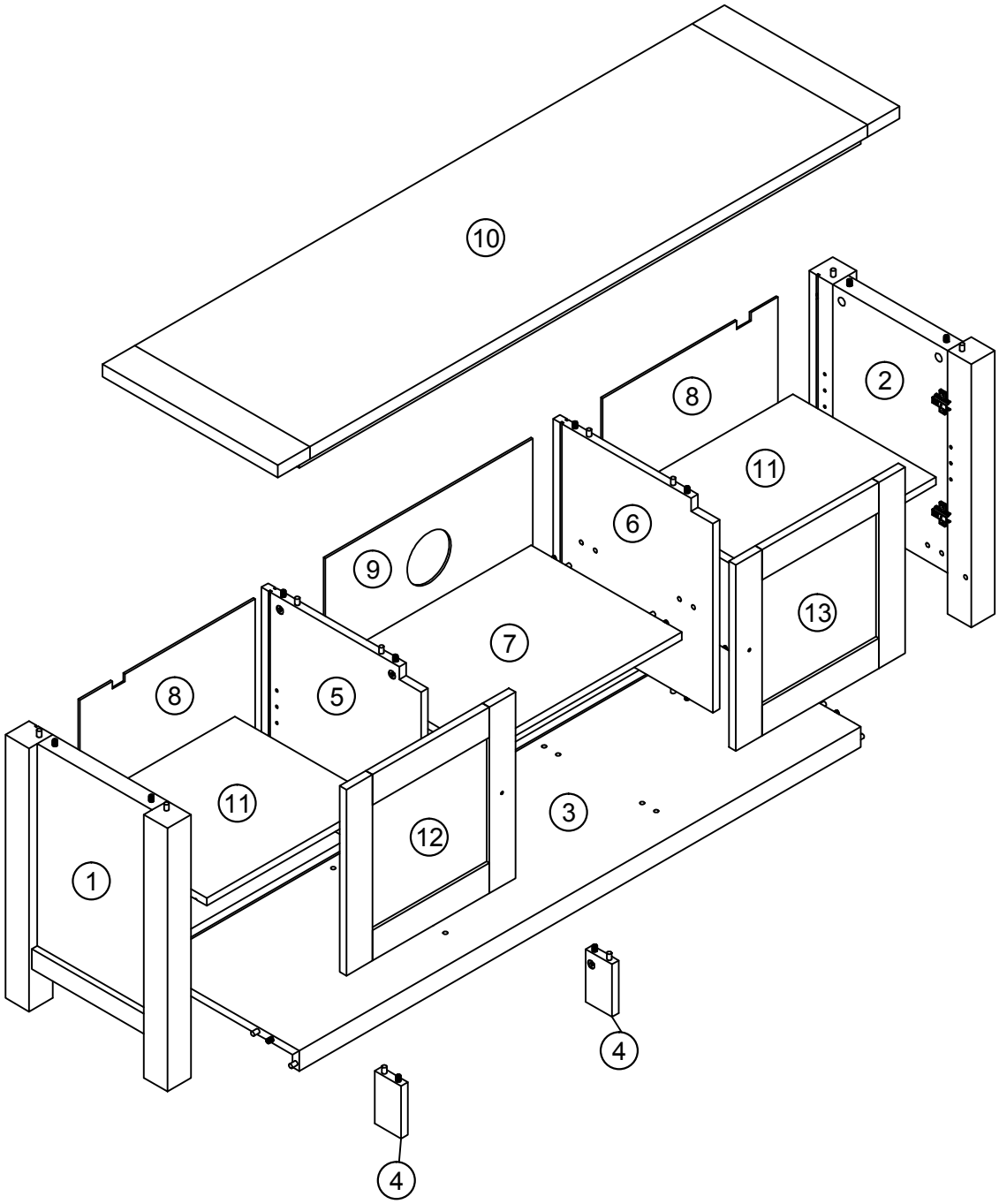

MALVERN DOVE GREY / BLACK / CREAM / CLASSIC CREAM WIDE TV

928939 / 850693 / 258626 / 681644 / 208000

Assembly instructions

Components supplied. Please use this guide if you require replacement parts.

Ref	Dimensions	Visual	Qty	Ctn
1	52 x 37cm	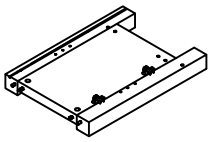	1	1
2	52 x 37cm	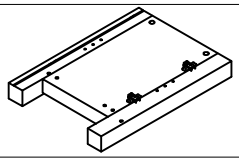	1	1
3	128 x 37cm	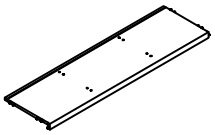	1	1
4	10x 6cm	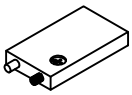	2	1
5	40 x 36cm	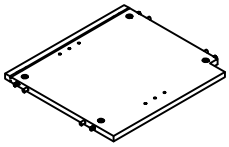	1	1
6	40 x 36cm	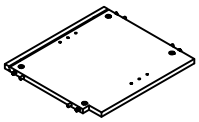	1	1
7	46 x 34cm	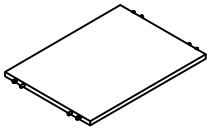	1	1

Ref	Dimensions	Visual	Qty	Ctn
8	41x 40cm	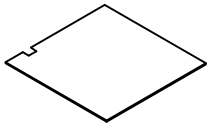	2	1
9	47 x 41cm	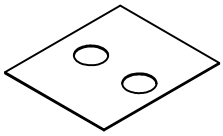	1	1
10	142 x 40cm	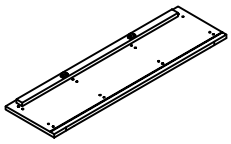	1	1
11	39 x 33cm	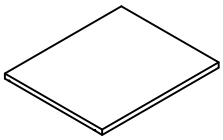	2	1
12	39 x 37cm	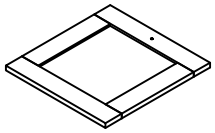	1	1
13	39 x 37cm	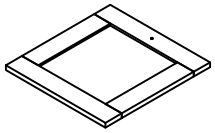	1	1

Fixtures and fittings supplied (actual size)

Ref	Dimensions	Qty	Spare Qty
B3	Ø15 x 12mm	N/A	2
B8	Ø8 x 38mm	N/A	2
U139	Ø4.5 x 15mm	8	1
Z14	Ø4 x 21mm	2	N/A
P3	Ø5 x 16mm	8	1
D6	Ø8 x 30mm	N/A	2
S41	**Ø4 x 16mm**	**2**	**1**

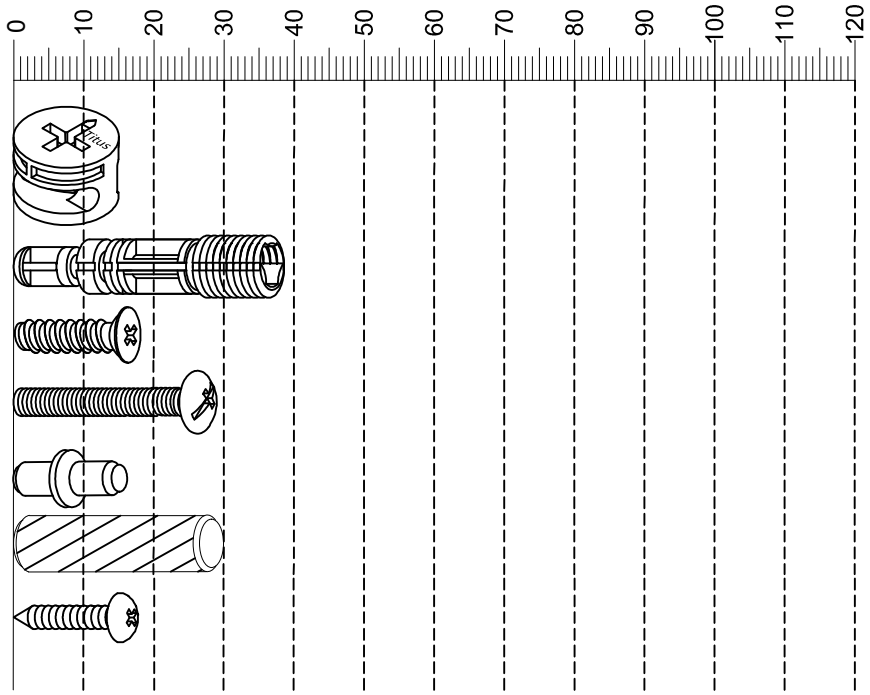

Fixtures and fittings supplied (not to scale)

Ref	Dimensions	Qty	Spare Qty	Visual
C11	N/A	4	N/A	
E29	N/A	2	N/A	
O1	Ø25mm	12	2	
T38	N/A	12	2	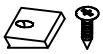
T39	**N/A**	**2**	**N/A**	

1

WHEN TIGHTENING THE CAM

TURN THE CAM IN A CLOCKWISE DIRECTION UNTIL THE ARROW POINTS IN THE POSITIONS SHOWN IN THE DIAGRAMS BELOW

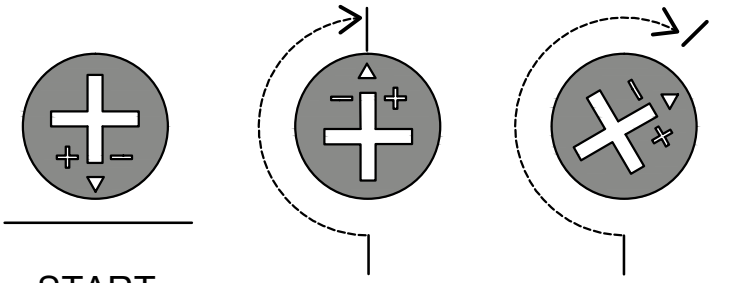

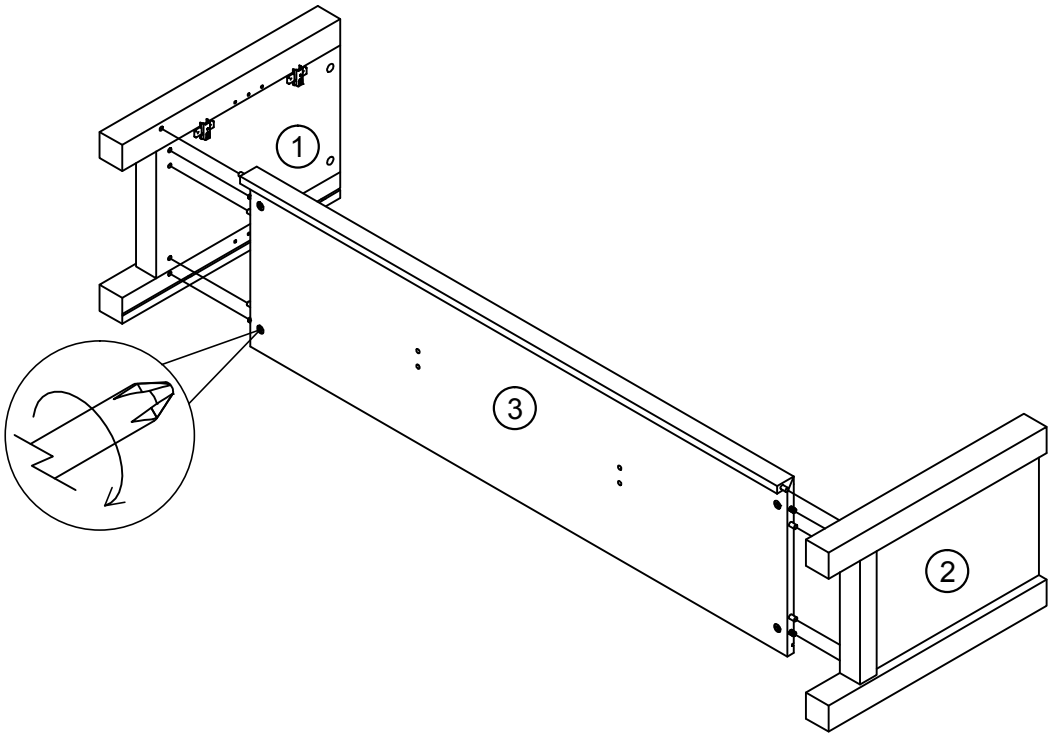

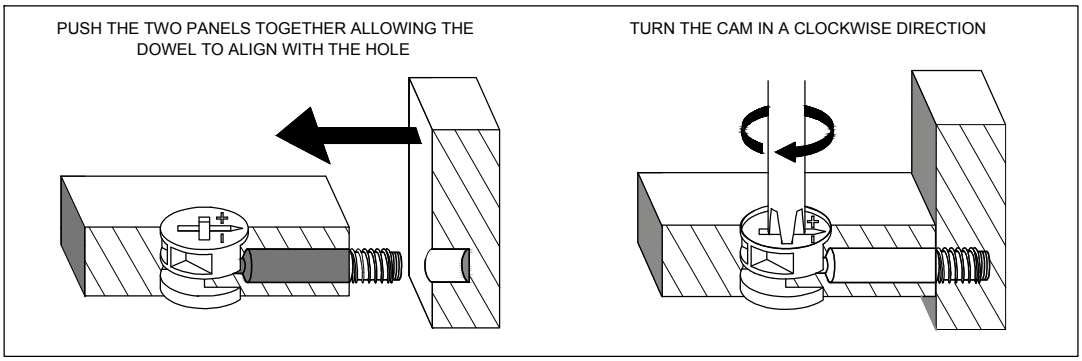

2

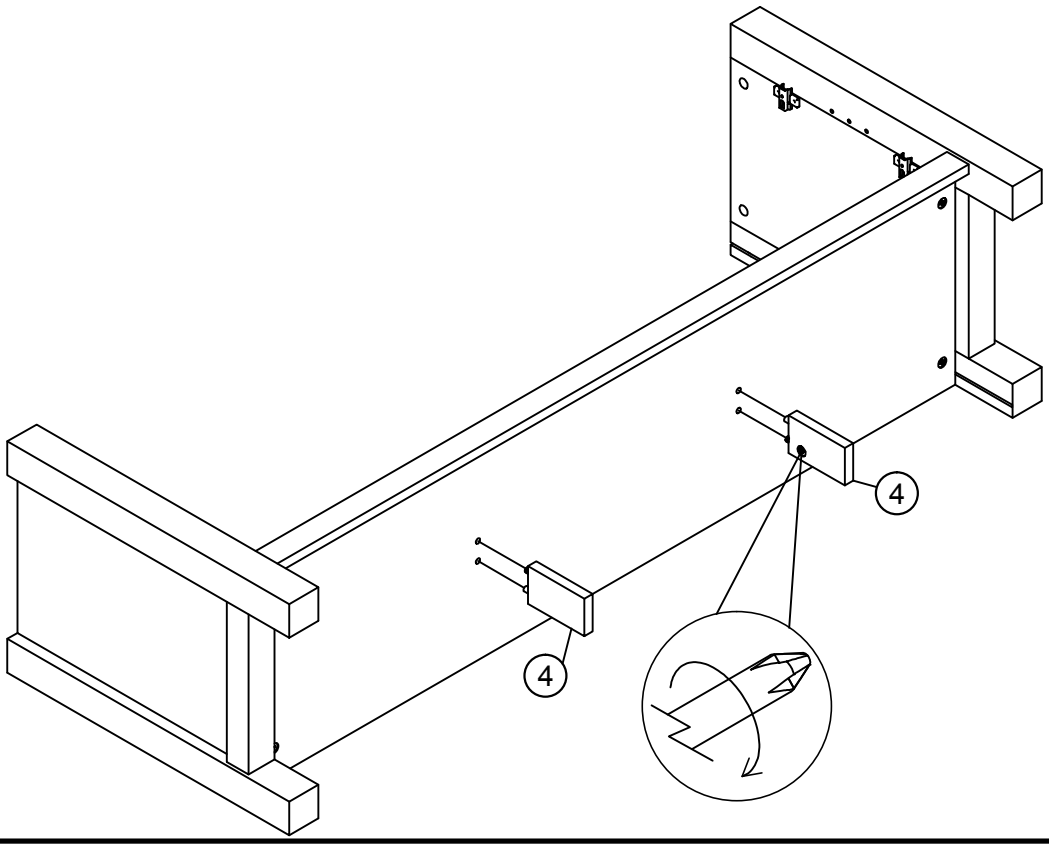

3

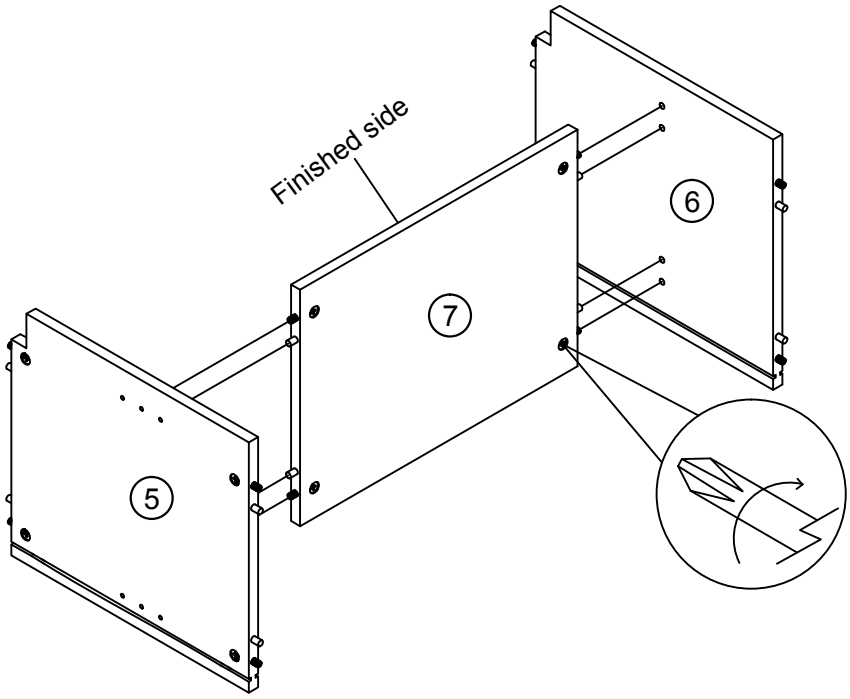

4

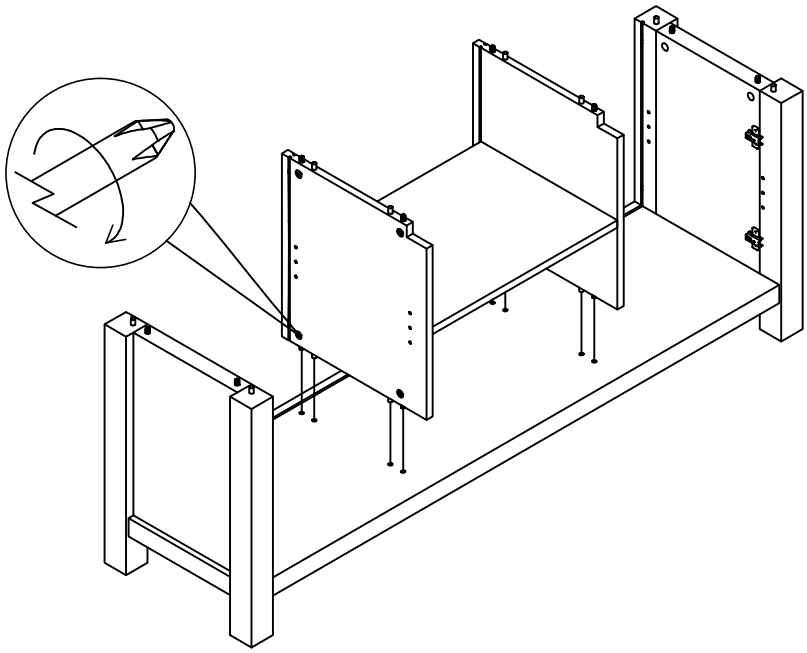

5

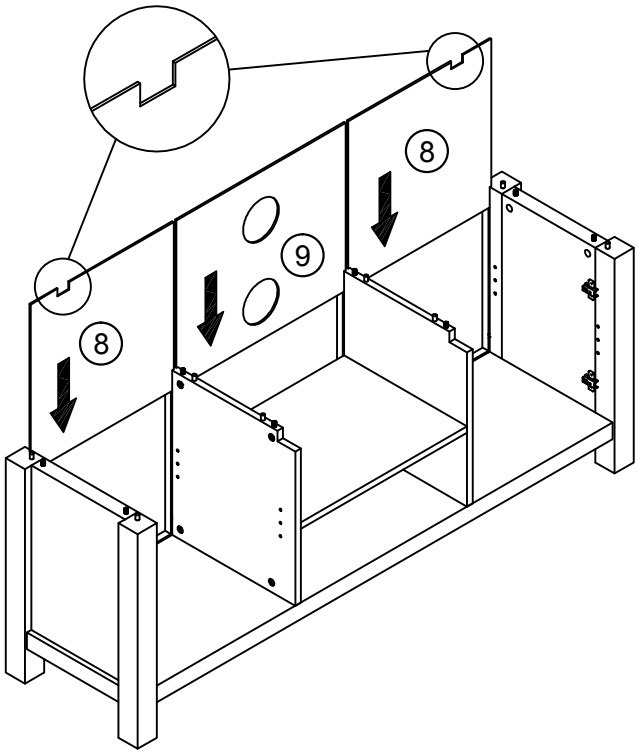

6

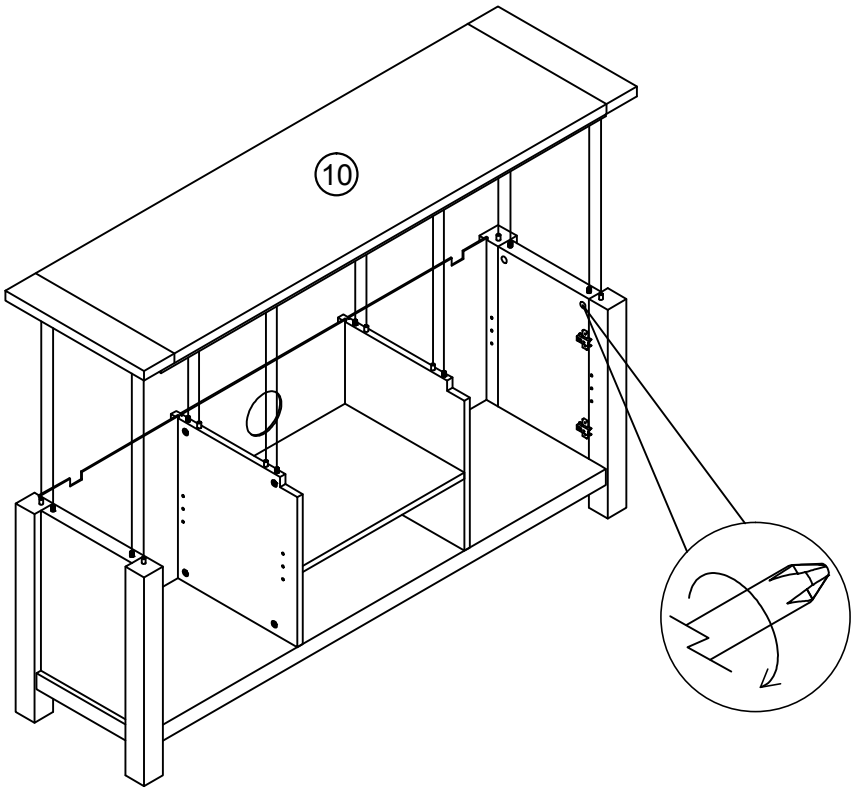

7

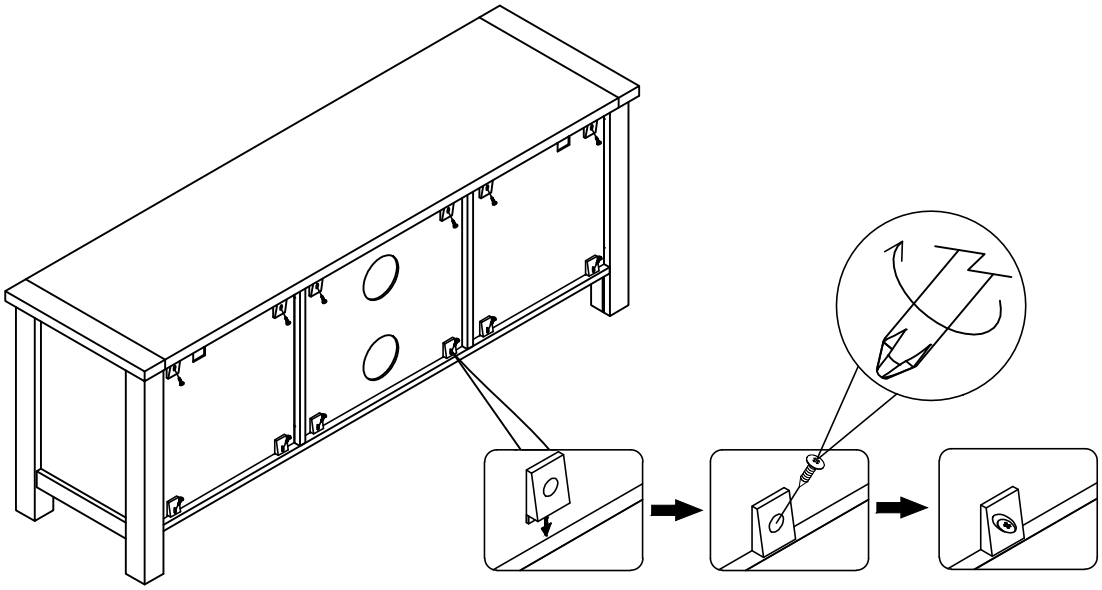

T38	N/A	12	PH2 not supplied

8

We recommend the use of the wall attachment bracket/strap provided for safety reasons.
Secure the strap to the wall with an appropriate screw and wall plug for your wall type (not provided).
To hide the strap behind the unit ,drill the hole lower than the top of unit.

Attach the other end of the strap to the underside of the top panel with screw.
Warning: Always ensure intended wall area to be drilled is free from hidden electrical wires,water and gas pipes.
NB:Wall fixings are not included-Please source suitable fixing for your wall type.
If in doubt please consult a qualified trades person.

Please ensure you secure your product to the wall for your and your family's safety before you use it.

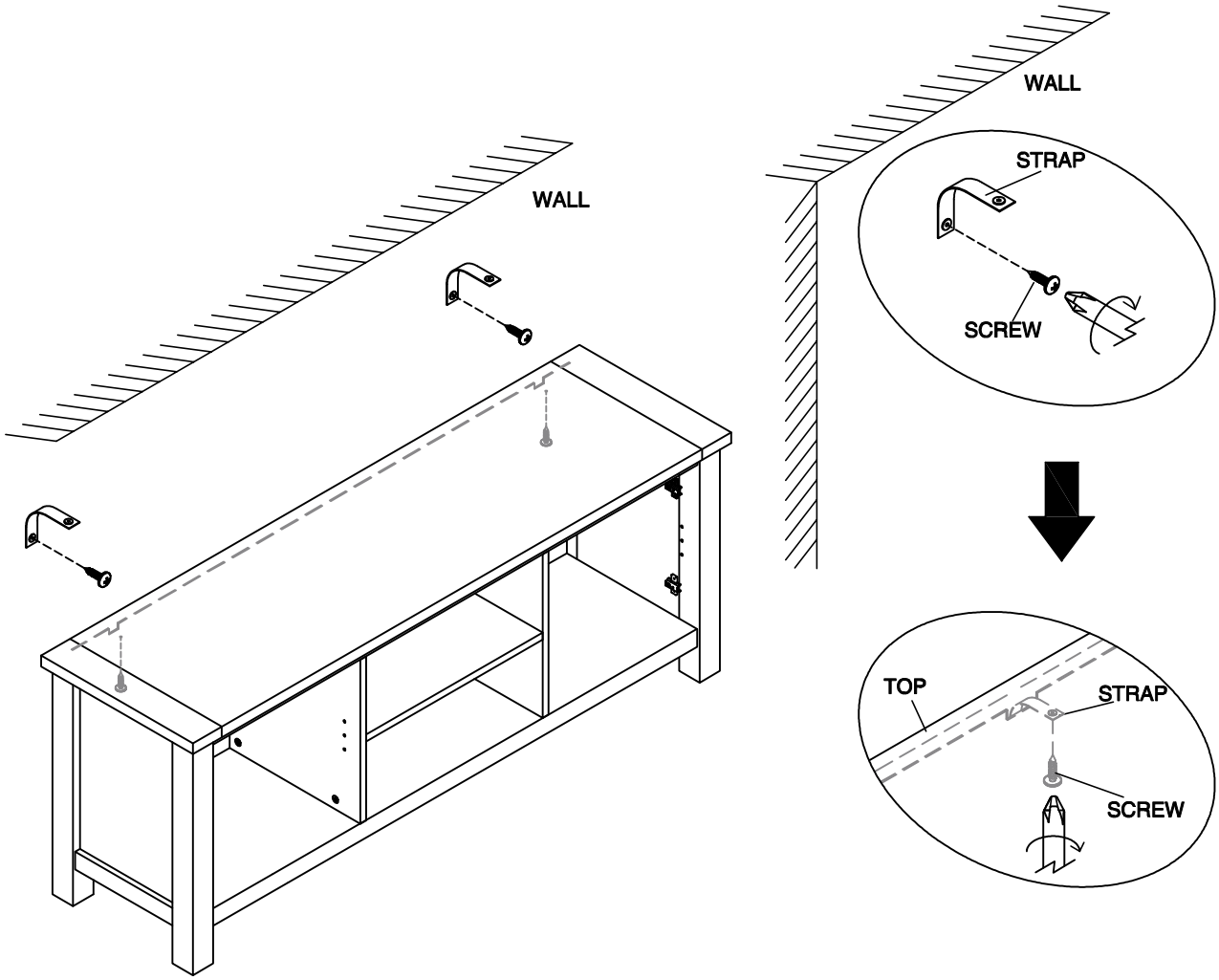

T39	N/A	2	
S41	Ø4 x 16mm	2	PH2 not supplied

9

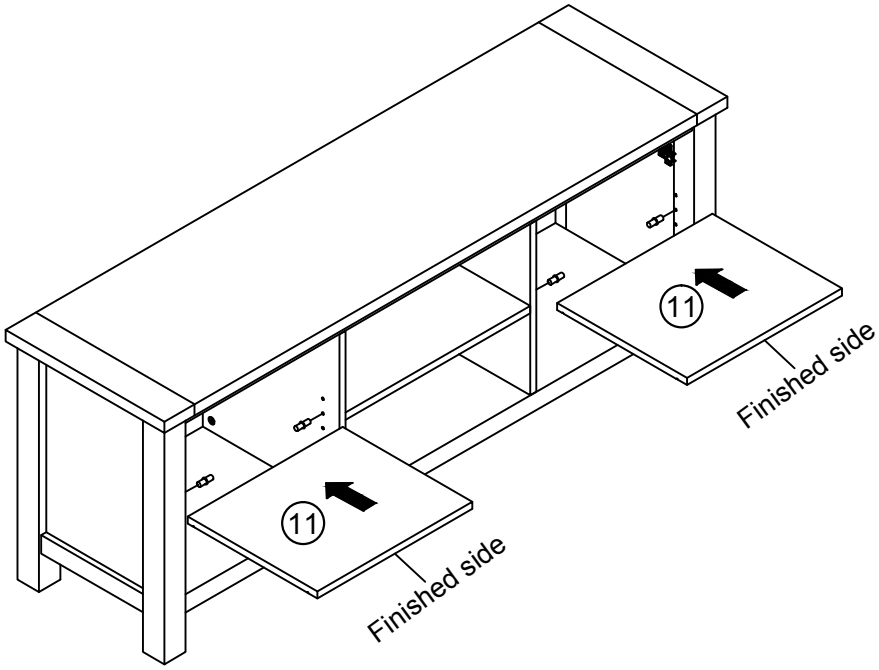

P3	Ø5 x 16mm	8	

10

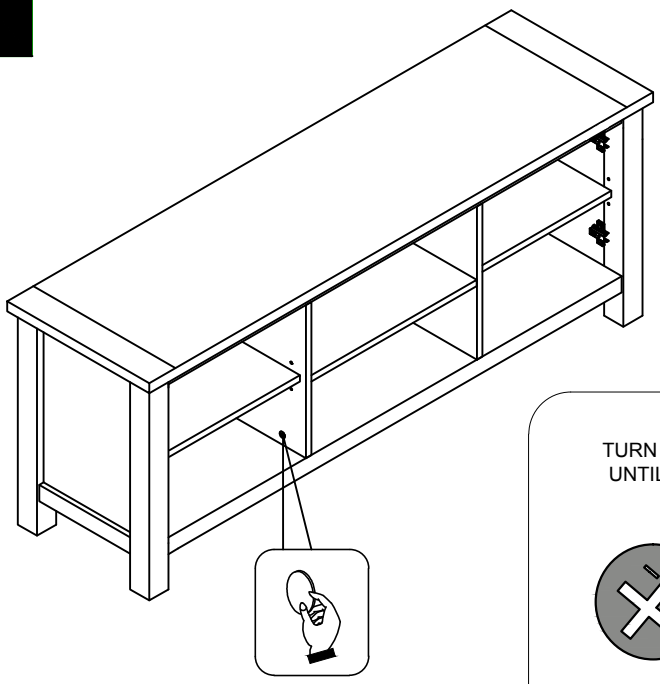

WHEN LOOSENING THE CAM

TURN THE CAM IN A COUNTERCLOCKWISE DIRECTION UNTIL THE ARROW POINTS IN THE POSITION SHOWN IN THE DIAGRAMS BELOW

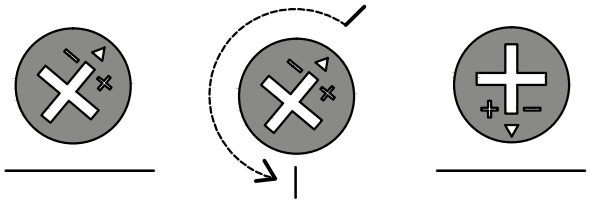

MAXIMUM LOCK | TURN TO UNLOCK | UNLOCKED

O1	Ø25mm	12	

11

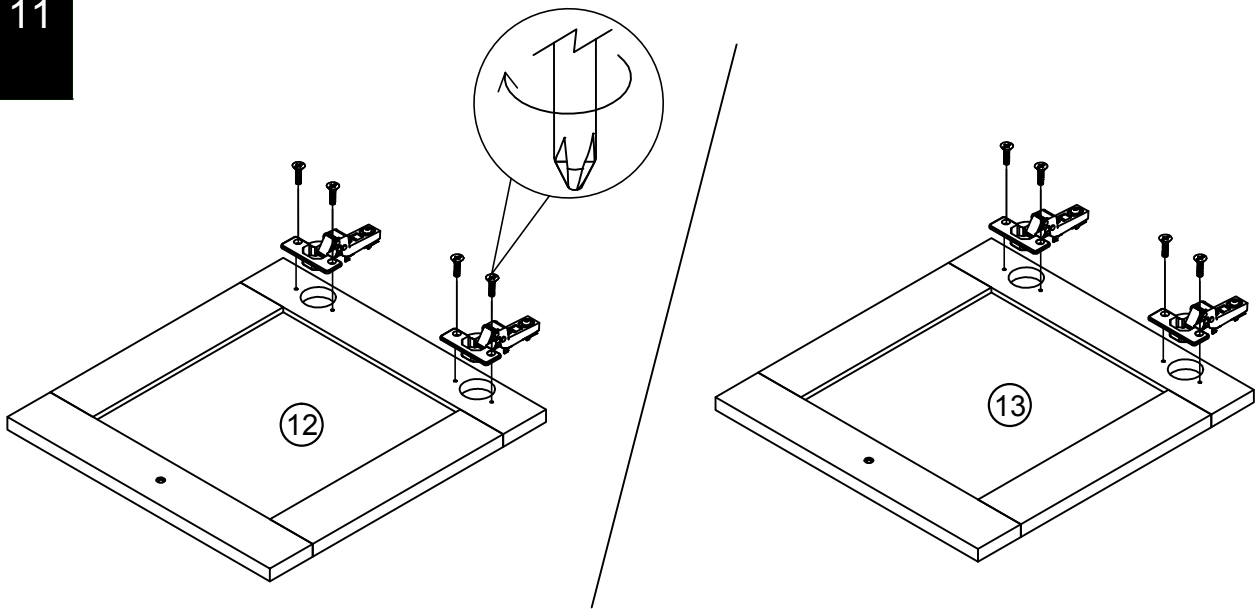

C11	N/A	4	
U139	Ø4.5 x 15mm	8	PH2 not supplied

12

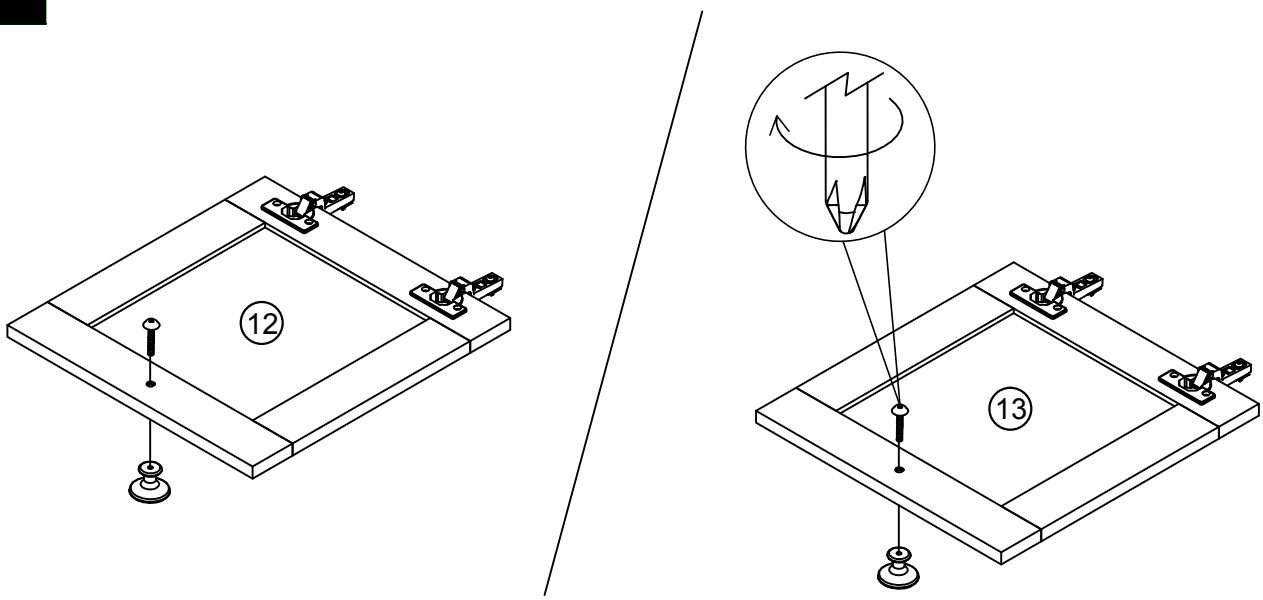

E29	N/A	2	
Z14	Ø4 x21mm	2	PH2 not supplied

13

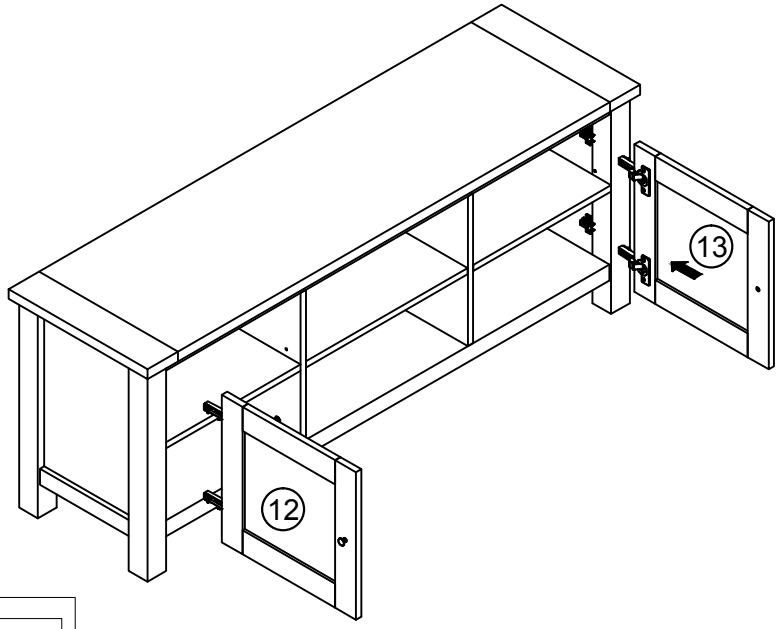

Install hinge

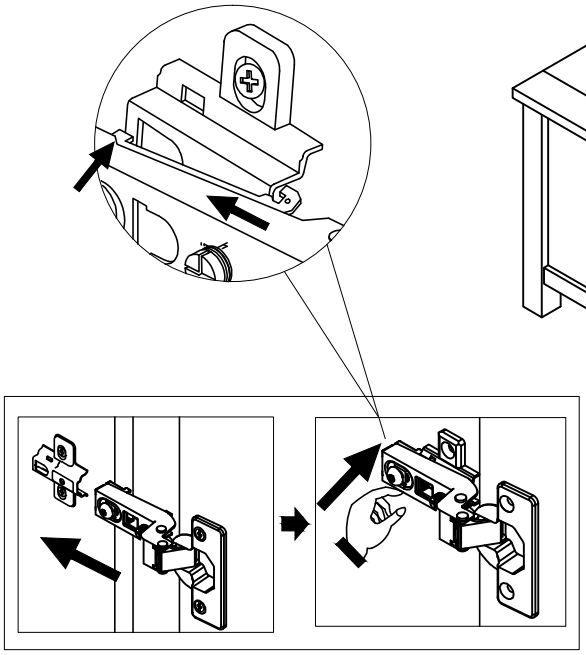

Remove hinge

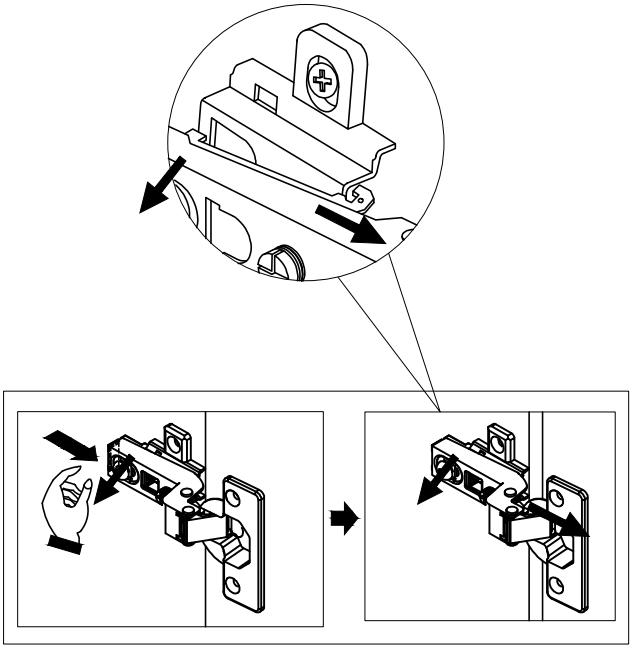

Adjust Hinge Position

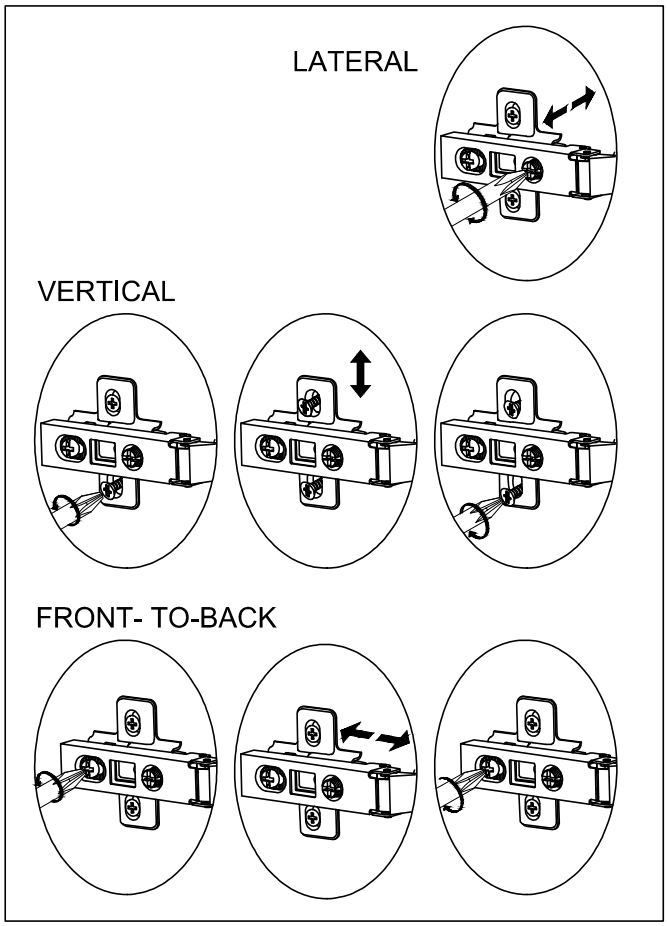

MALVERN DOVE GREY / BLACK / CREAM / CLASSIC CREAM WIDE TV

928939 / 850693 / 258626 / 681644 / 208000

Actual product size

H55 x W142 x D40cm

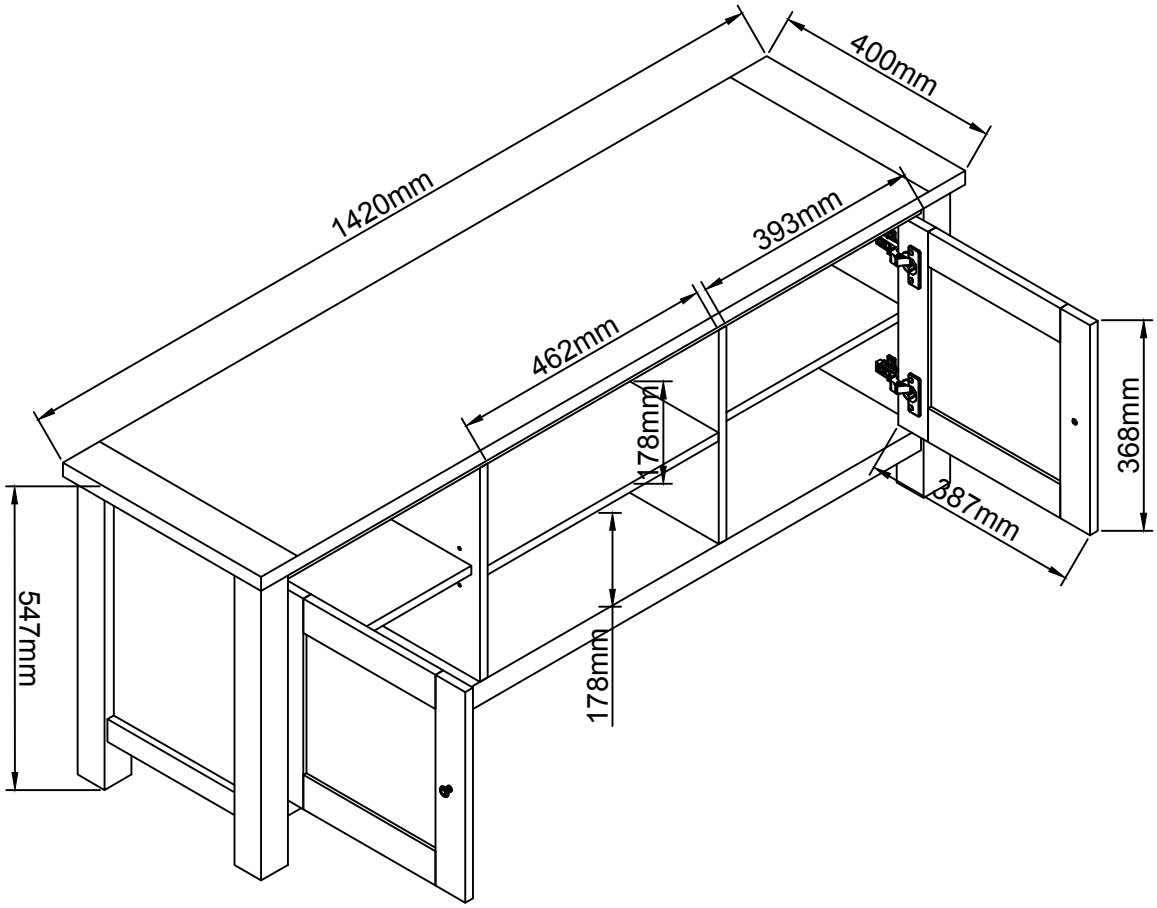

Produced in China for Next Retail Ltd.
928939 / 850693 / 258626 / 681644 / 208000-2020-V1.

MALVERN DOVE GREY / BLACK / CREAM / CLASSIC CREAM WIDE TV
928939 / 850693 / 258626 / 681644 / 208000

Warnings

We suggest you retain these instructions for future reference.

Keep fittings out of children's reach and keep children well away from construction area.

This product should only be used on firm level ground.

Please periodically check all fittings and re-tighten as necessary.

Please do not sit or stand on your furniture.

Avoid exposing the furniture to excessive heat or direct sunlight as this can cause deterioration of the colour.

Unwrap all packaging materials and place the components on top of the carton box or on a clean floor to protect it from damage

Missing parts

If you are missing any fixtures and fittings for your product. Please contact our customer service team on 0333 777 8999 and they will be happy to arrange for a replacement to be sent to you free of charge.

Home service technicians

If you have a fault with your product, please contact our customer service team on 0333 777 8999. If you have had the product for 28 days or less you may be offered a replacement,refund or for a fully trained home service technician to visit your home to assess the fault and repair the product where possible. If you have had the product for more than 28 days we will send an independant home service technician to review and repair the product where possible and recommend further action.

You can write to us at

Home Customer Services
Next Retail Ltd.
Desford Road,
Leicester,
LE19 4AT

To view our full furniture range please visit www.next.co.uk

Produced in China for Next Retail Ltd.
928939 / 850693 / 258626 / 681644 / 208000-2020-V1.