Birlea®

Assembly Instructions

Thank you for purchasing a Birlea product

For a chance to win a Love2Shop voucher simply post a picture of your new product on your preferred social channels tagging Birlea Furniture. One winner will be selected at random each month.

*Terms & conditions may apply.

Are you happy with your purchase?

Yes: That's great, we would love to hear more from you. Please leave us a review on our Trustpilot link on the QR code here. Your feedback will be greatly appreciated.

SCAN ME

No: If for any reason there is something missing, indifferent or incorrect with your order, please contact the retailer that you purchased your item from.

Please note that this items build time is around 30 minutes with 2 man build

Birlea

Vendor:S000403

ASSEMBLY INSTRUCTIONS
NOAH 2 DOOR 1 DRAWER TV UNIT

IMPORTANT: READ THESE INSTRUCTIONS CAREFULLY BEFORE ASSEMBLING OR USING NOAH 2 DOOR 1 DRAWER TV UNIT.

PLEASE KEEP THESE INSTRUCTIONS FOR FUTURE REFERENCE.

HEALTH & SAFETY:

DO NOT use this item if any parts are missing, damaged or worn.
DO NOT use this item unless all fixings are secured.
Please keep small parts out of reach of children
Always use on a level, even surface.

CARE & MAINTENANCE:

Assemble in the room of use
Assembly should be carried out with this item laying flat, not standing upright.
Assemble on a soft, clean surface to prevent damages.
To remove the printed numbers on the pieces, use the eraser provided
Periodically check all screws & fixings to ensure they are secure.
DO NOT push the item as this will damage the base.
Always lift the item with two people to reposition.
Keep any sharp objects away from the item.

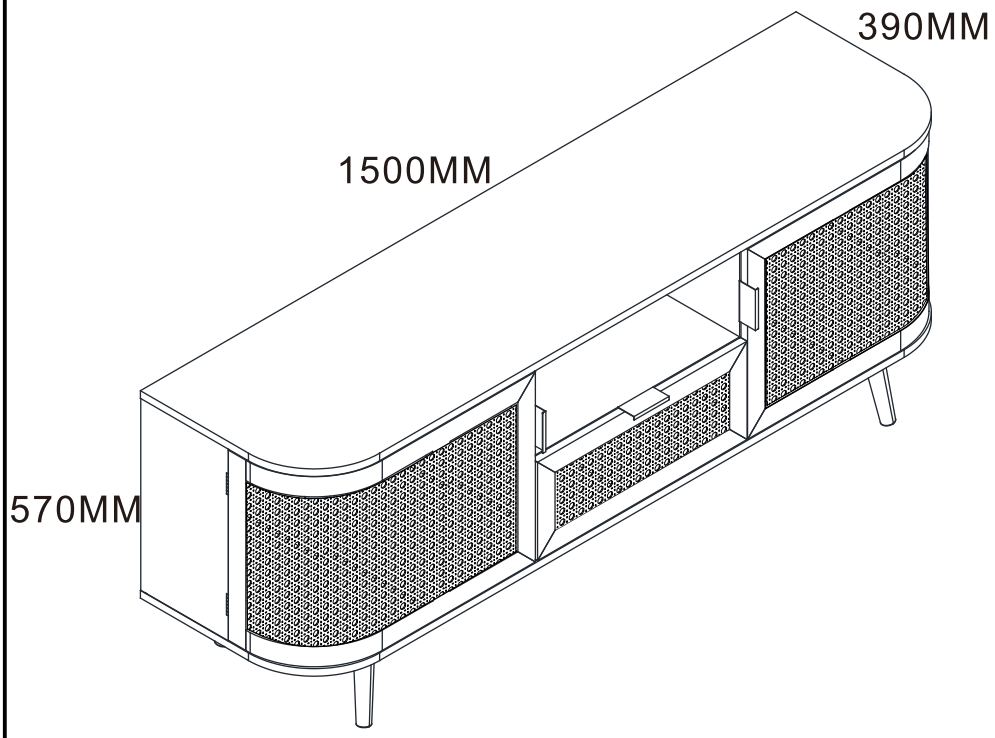

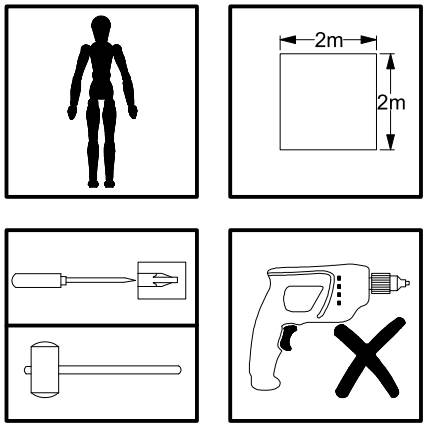

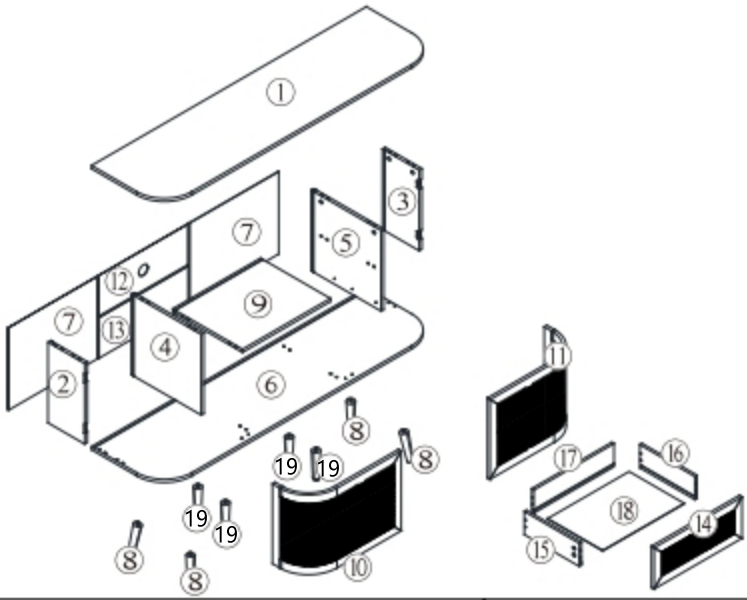

Parts List

Part	Descripion	Box	Qty
1	Cabinet Top	1	1
2	Left Side Panel	1	1
3	Right Side Panel	1	1
4	Left Slide Support Panel	1	1
5	Right Slide Support Panel	1	1
6	Bottom Panel	1	1
7	Back Side Panel	1	2
8	Feet	1	4
9	Shelf	1	1
10	Left Door	1	1
11	Right Door	1	1
12	Back Middle Upper Panel	1	1
13	Back Middle Down Panel	1	1
14	Drawer Front Panel	1	1
15	Drawer Left Side Panel	1	1
16	Drawer Right Side Panel	1	1
17	Drawer Back Panel	1	1
18	Drawer Bottom Panel	1	1
19	Center Adjustable Foot	1	4

Hardware List

Part	Descripion	Qty
A	Wooden Dowel M6X30MM	20
B	Cam Bolt M6X35MM	16
C	Cam Lock 15X10MM	16
D	Screw M4X35MM	14
E	Screw M4X12MM	22
F	Metal Leg Plate	4
G	Plastic Corner Support	16
H	Screw M3X14MM	64
I	Screw M3X12MM	12
J	Screw M3.5X14MM	6
K	Nylon Anti Tip Strap	2
L	Metal Door Plate	4
M	Wall Plug	2
N	Hinge	4
O	Handle	3
P	Slide Sets METAL RUNNER 12" (CL)	1
	Slide Sets METAL RUNNER 12" (CR)	
	Slide Sets METAL RUNNER 12" (DL)	
	Slide Sets METAL RUNNER 12" (DR)	
Q	Magnetic Door Catch	4

**** You will need a small mallet and a screwdriver for assembly.**
**** Some screws and wooden dowel may remain.**



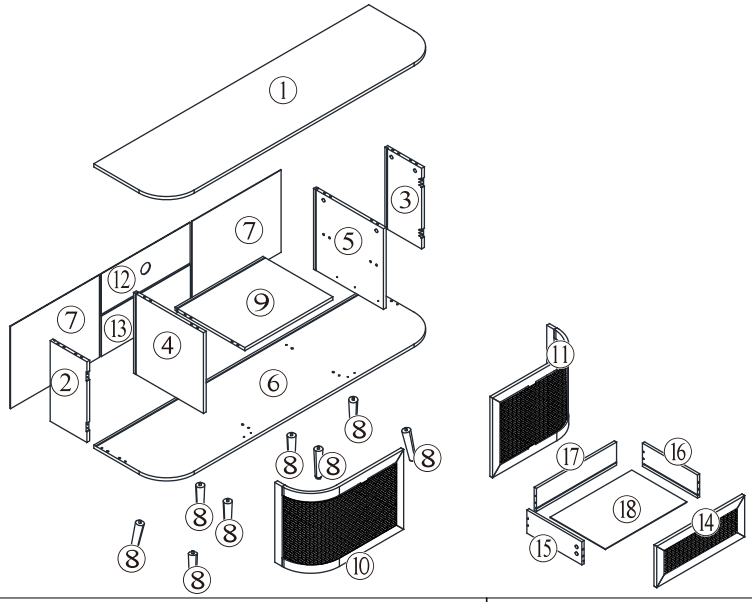

Parts List			
Part	**Descripion**	**Box**	**Qty**
1	Cabinet Top	1	1
2	Left Side Panel	1	1
3	Right Side Panel	1	1
4	Left Slide Support Panel	1	1
5	Right Slide Support Panel	1	1
6	Bottom Panel	1	1
7	Back Side Panel	1	2
8	Feet	1	8
9	Shelf	1	1
10	Left Door	1	1
11	Right Door	1	1
12	Back Middle Upper Panel	1	1
13	Back Middle Down Panel	1	1
14	Drawer Front Panel	1	1
15	Drawer Left Side Panel	1	1
16	Drawer Right Side Panel	1	1
17	Drawer Back Panel	1	1
18	Drawer Bottom Panel	1	1

**** You will need a small mallet and a screwdriver for assembly.**
**** Some screws and wooden dowel may remain.**

Hardware List		
Part	**Descripion**	**Qty**
A	Wooden Dowel M6X30MM	20
B	Cam Bolt M6X35MM	16
C	Cam Lock 15X10MM	16
D	Screw M4X35MM	14
E	Screw M4X12MM	22
F	Metal Leg Plate	4
G	Plastic Corner Support	16
H	Screw M3X14MM	64
I	Screw M3X12MM	12
J	Screw M3.5X14MM	6
K	Nylon Anti Tip Strap	2
L	Metal Door Plate	4
M	Wall Plug	2
N	Hinge	4
O	Handle	3
P	Slide Sets METAL RUNNER 12" (CL)	1
	Slide Sets METAL RUNNER 12" (CR)	
	Slide Sets METAL RUNNER 12" (DL)	
	Slide Sets METAL RUNNER 12" (DR)	
Q	Magnetic Door Catch	4

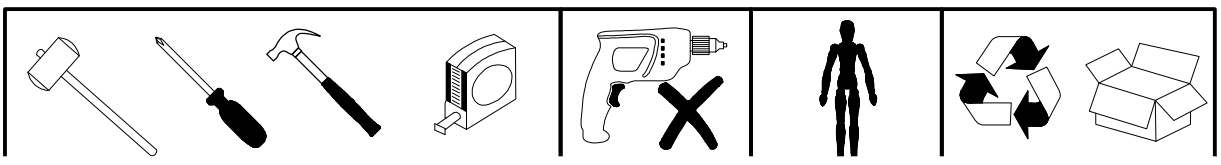

Step 3

A X 4
C X 4

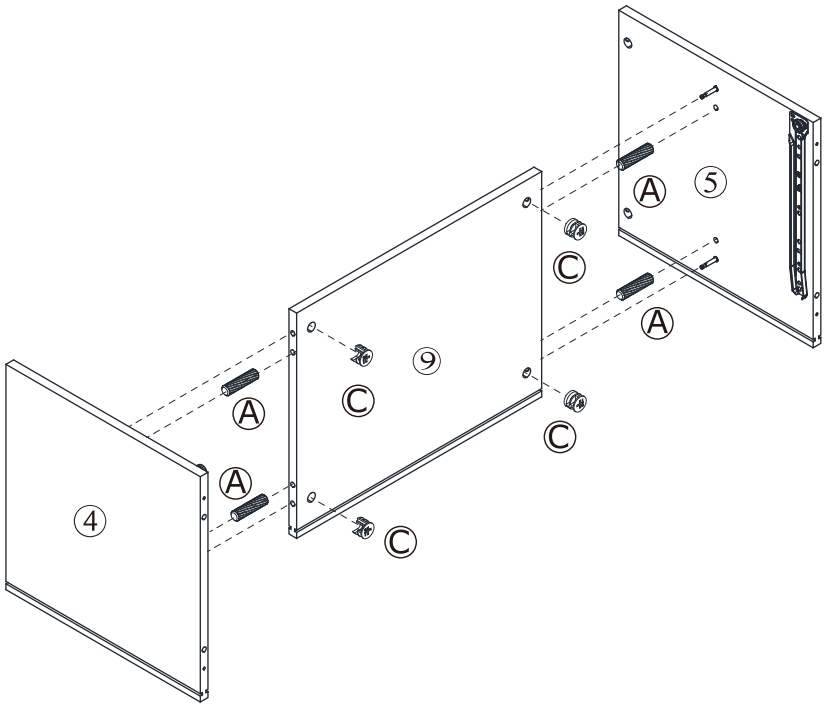

Step 4

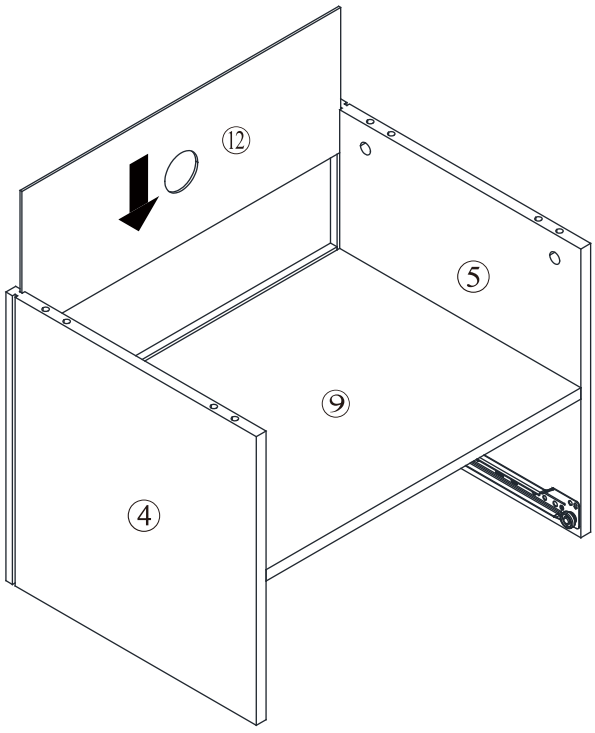

Step 5

B X 8
H X 4
Q X 2

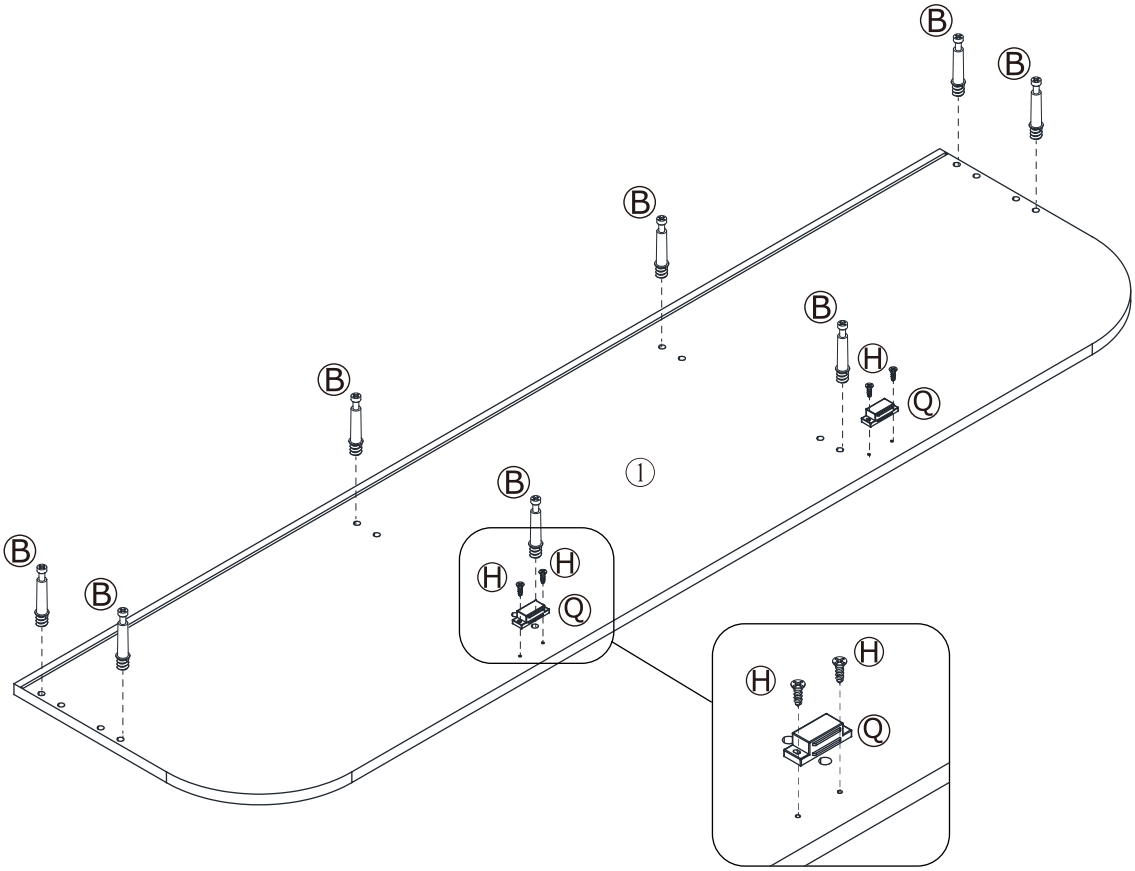

Step 6

A X 4
C X 4

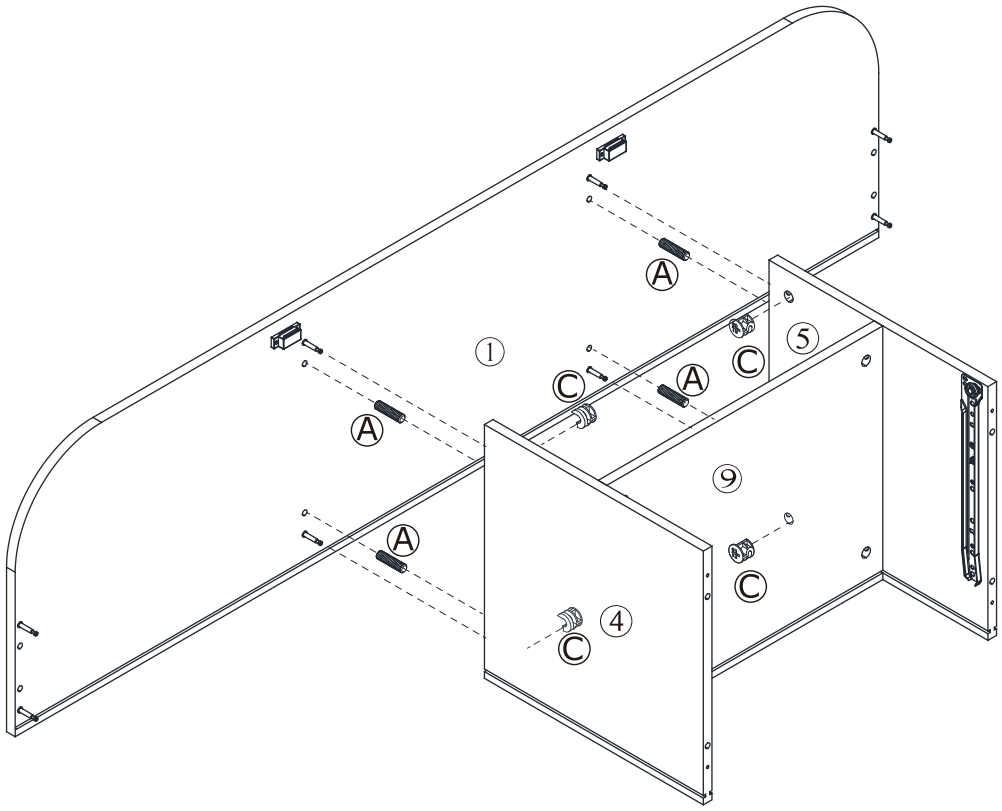

Step 7

A X 4
C X 4

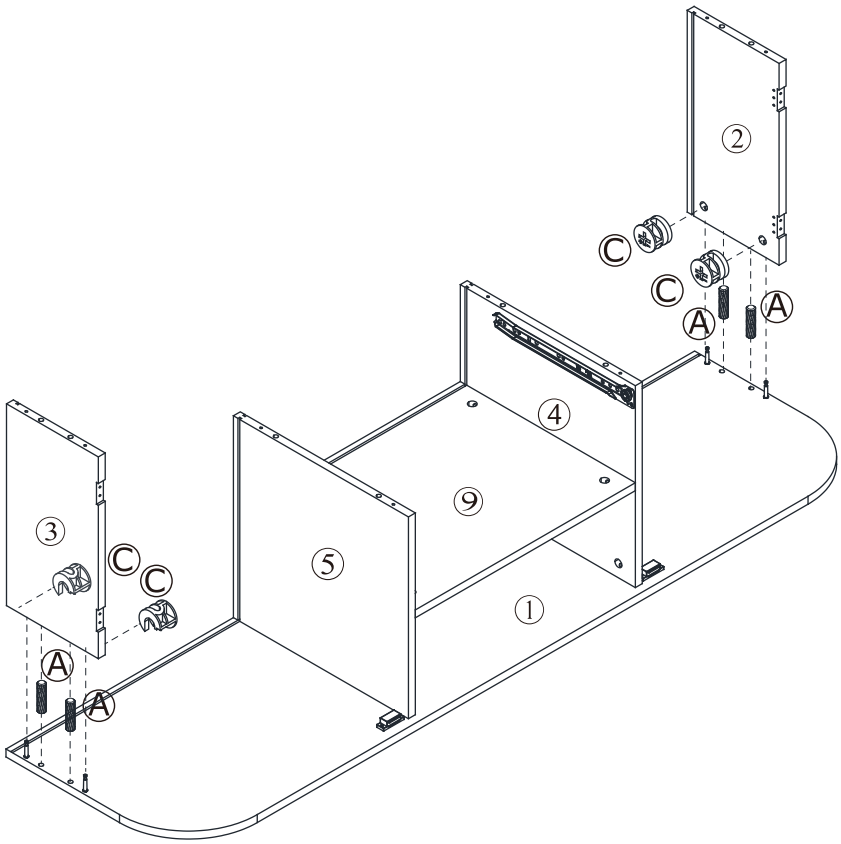

Step 8

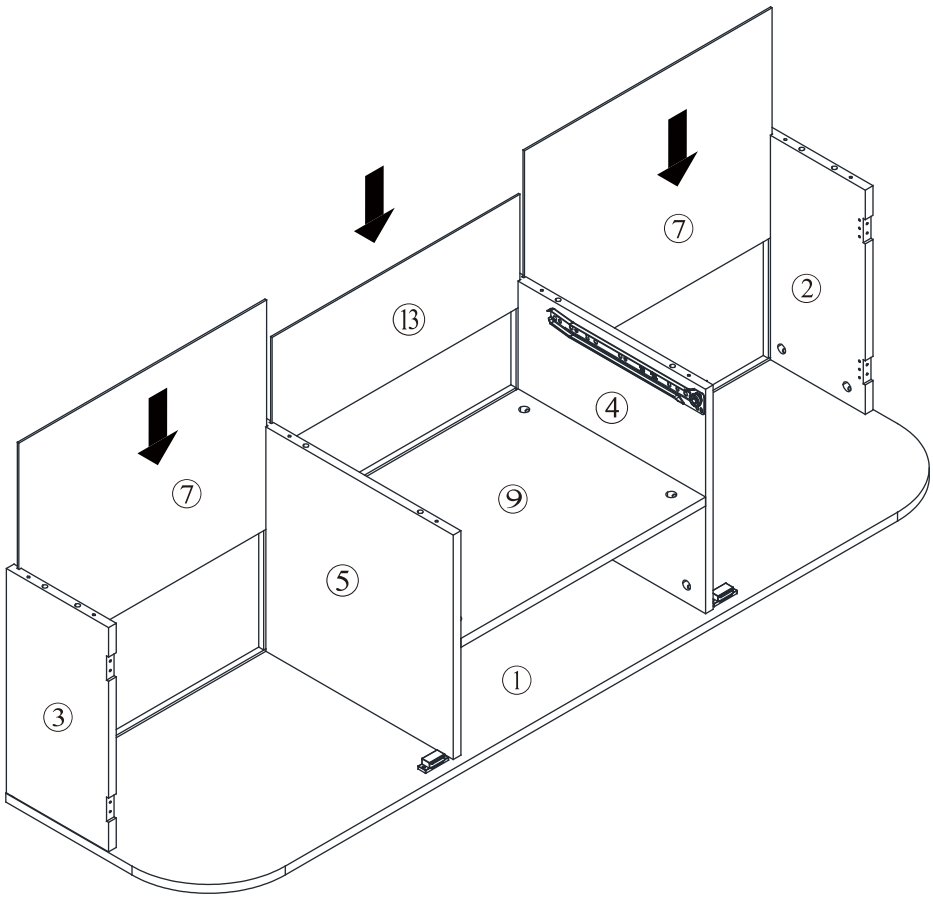

Step 9

H X 4
Q X 2

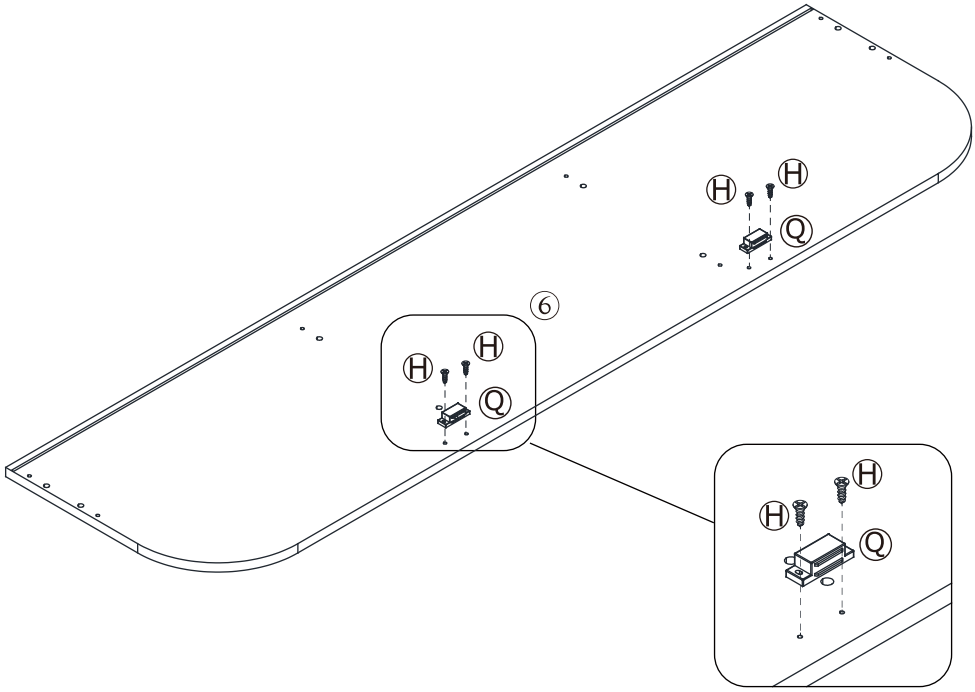

Step 10

A X 8
D X 8

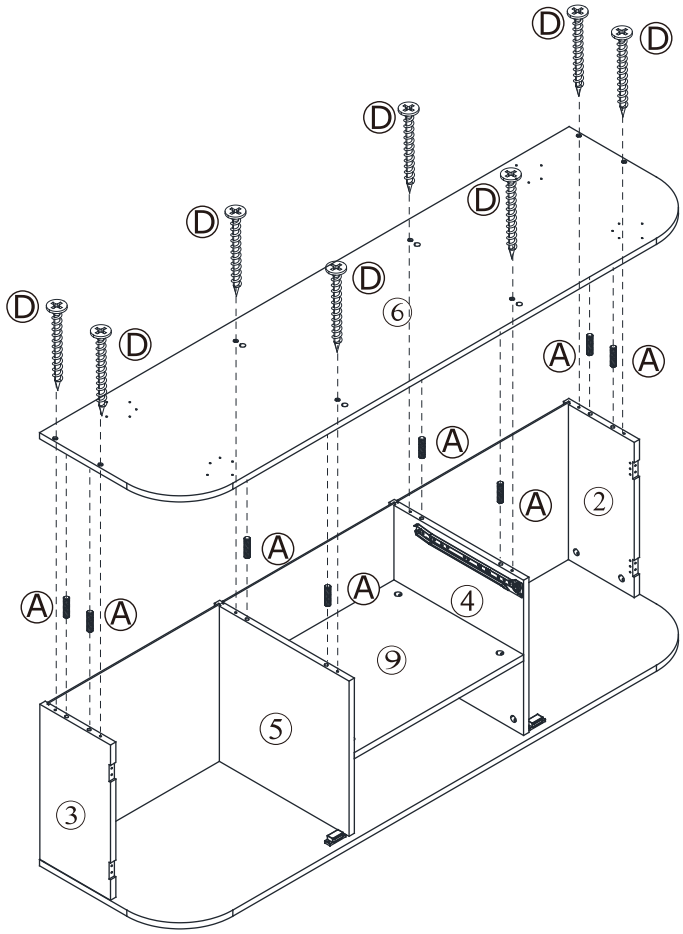

Step 11

F X 4
E X 20

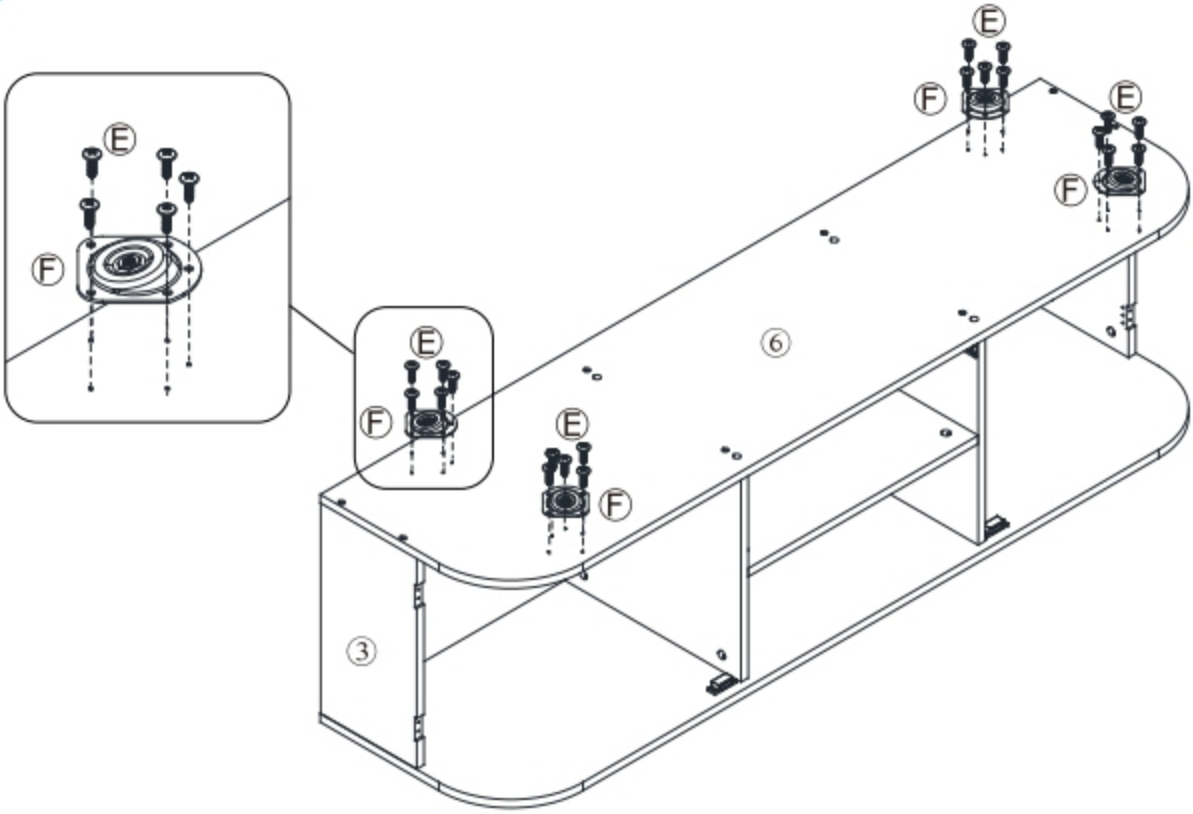

Step 12

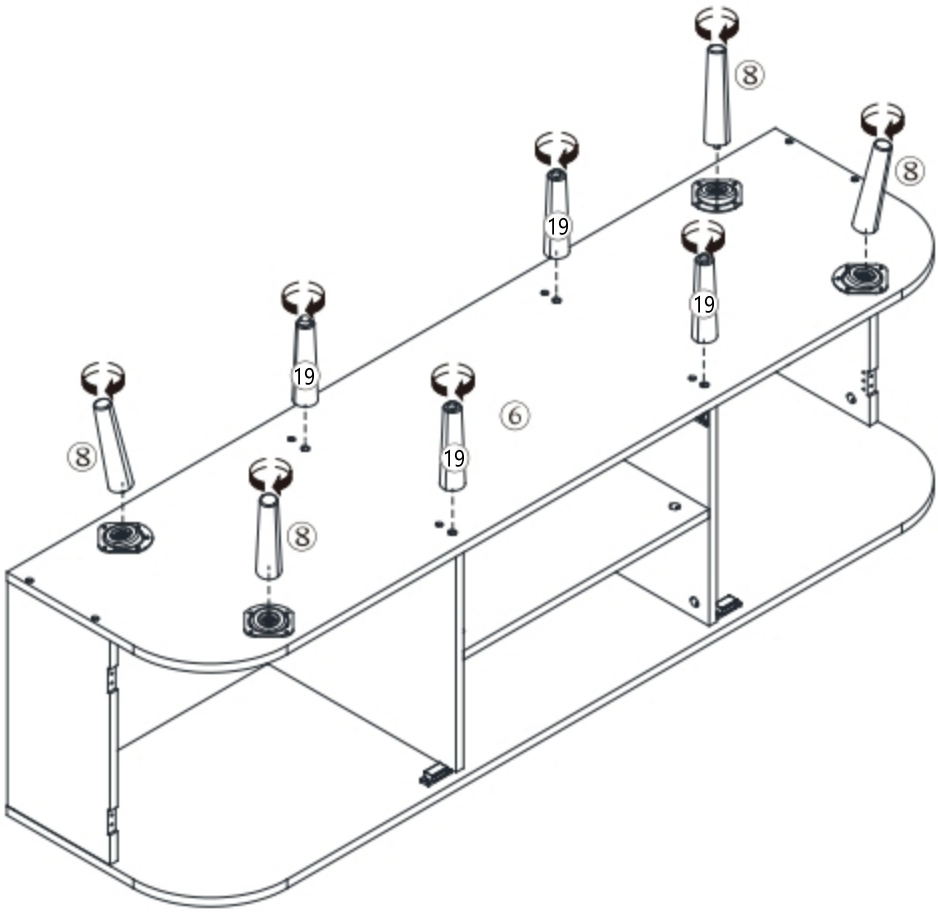

Step 13

H X 20
J X 4
L X 4
N X 4
O X 2

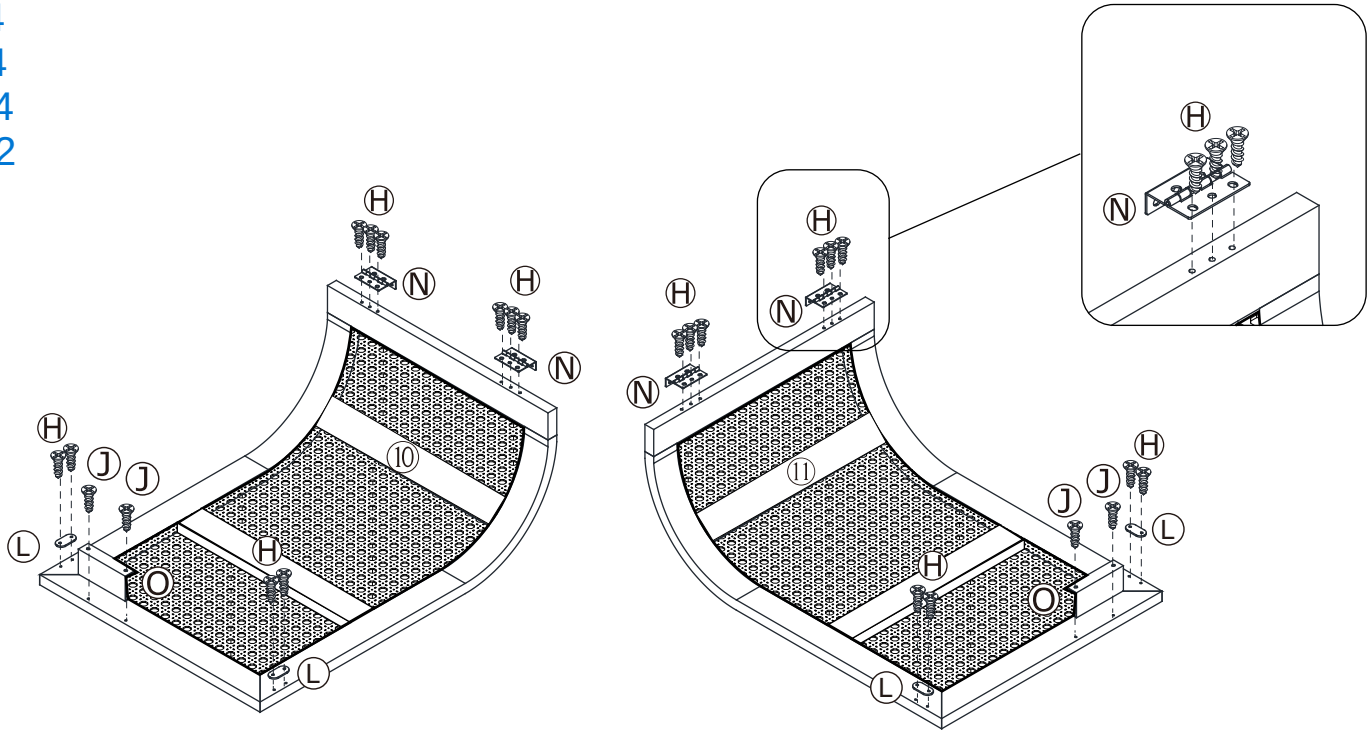

Step 14

H X 20

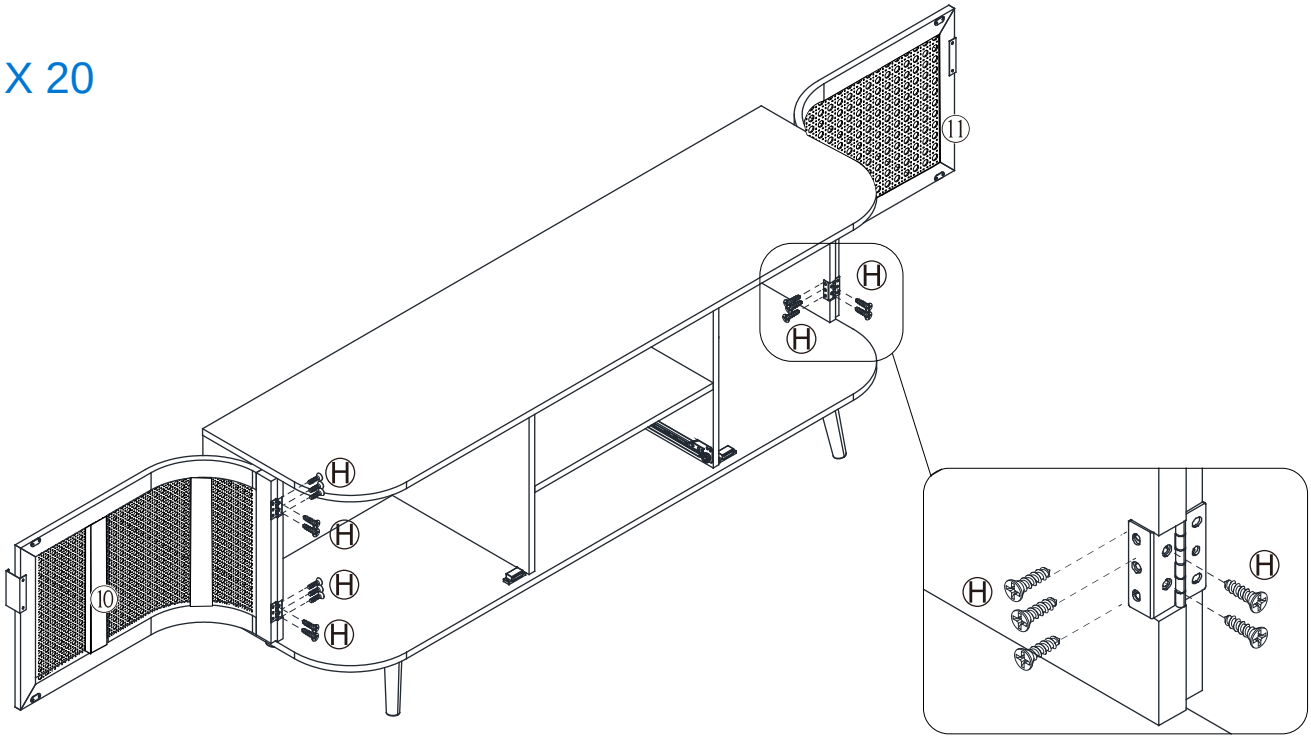

Step 15

D X 4

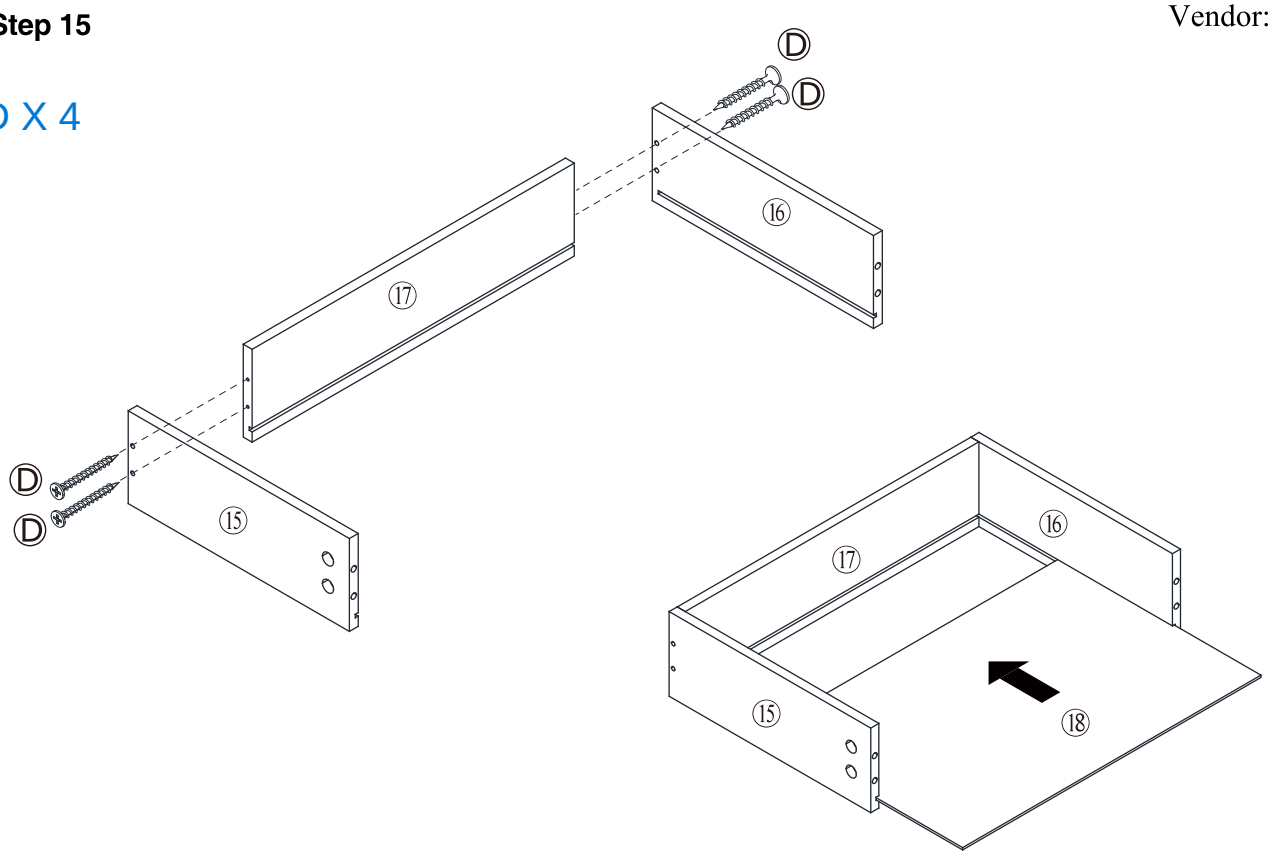

Step 16

B X 4
C X 4
J X 2
O X 1

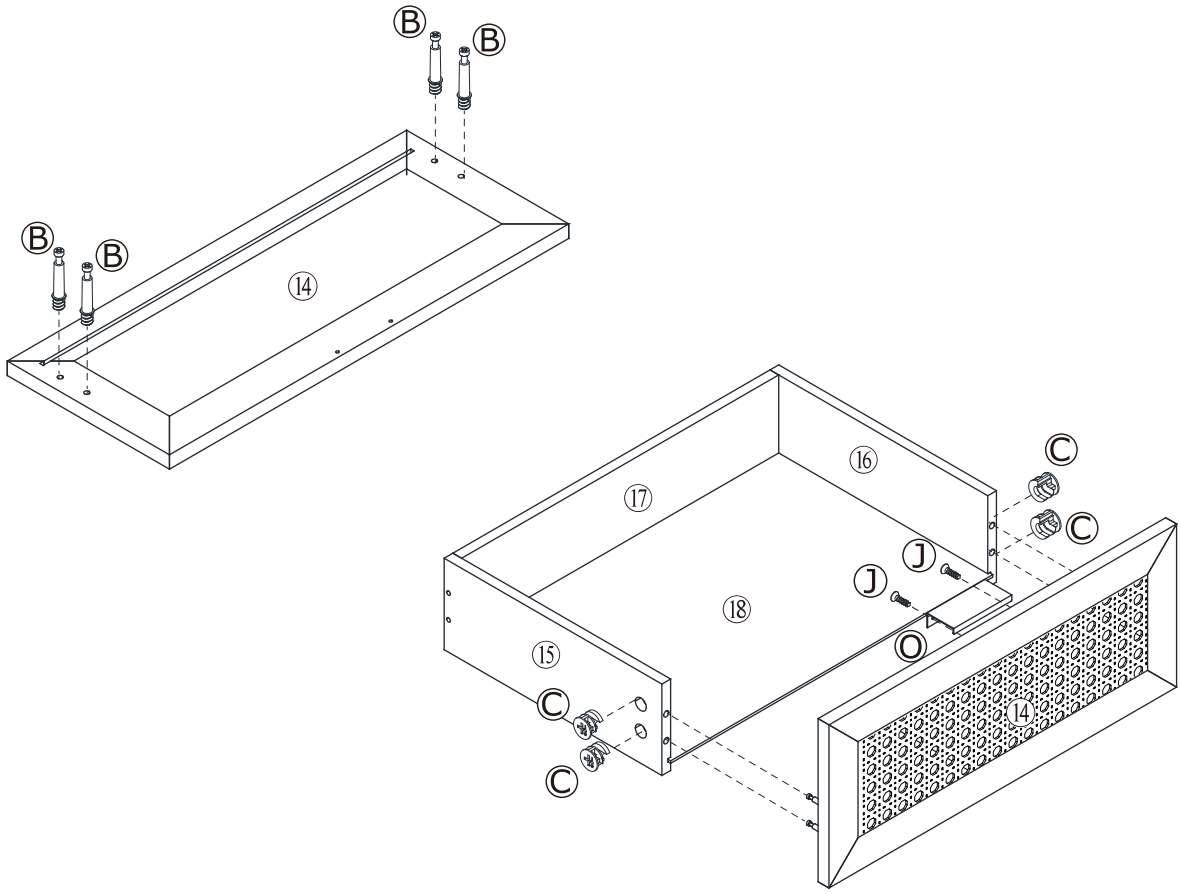

Step 17

I X 6
P(DL) X 1
P(DR) X 1

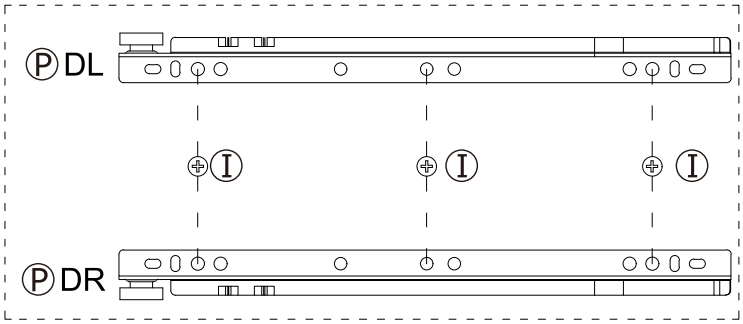

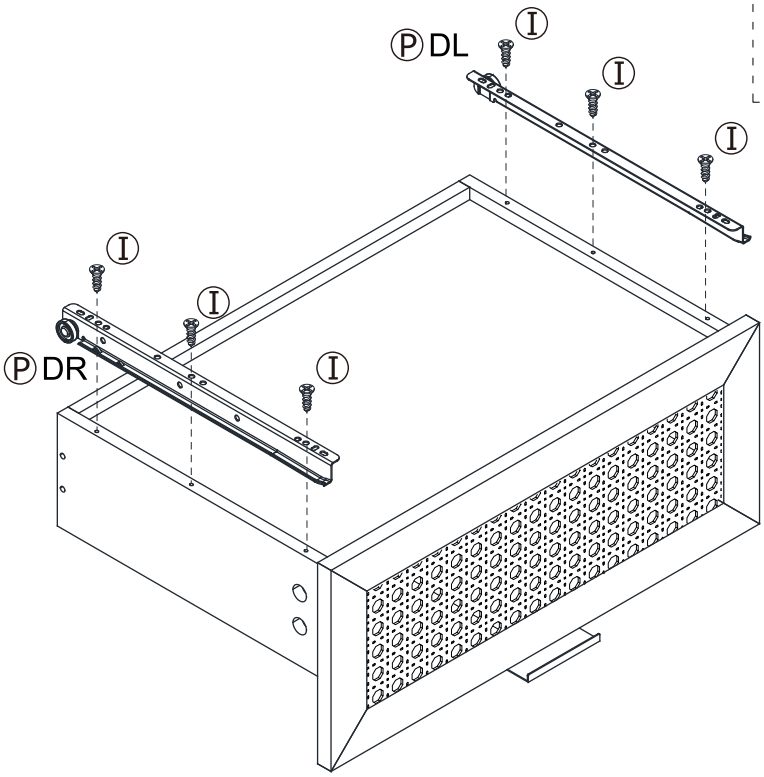

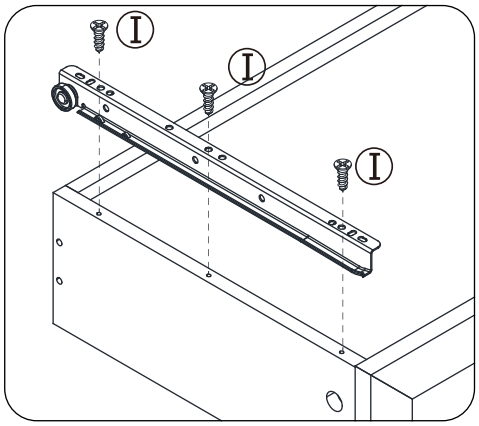

Step 18

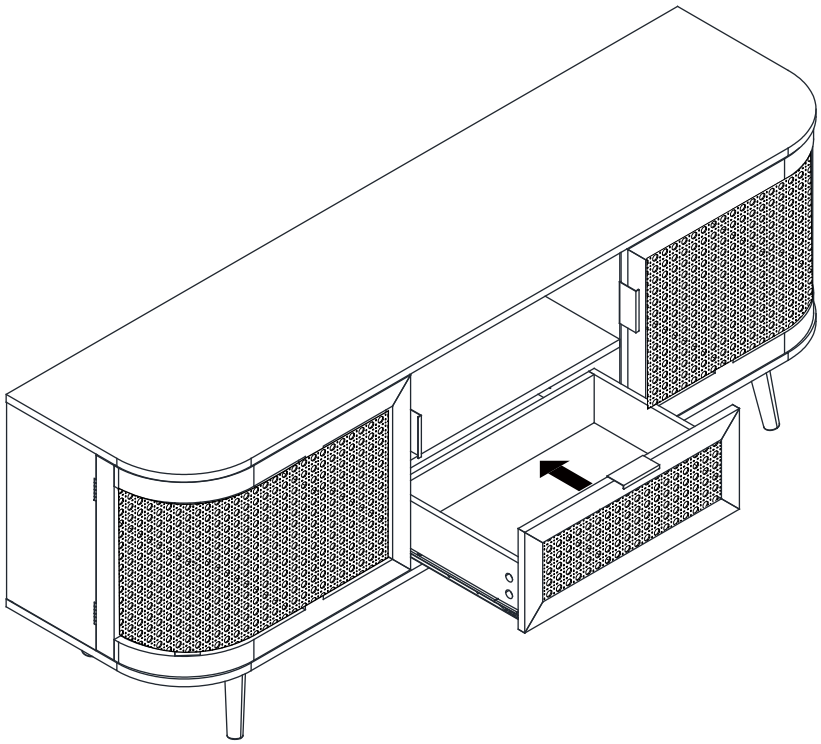

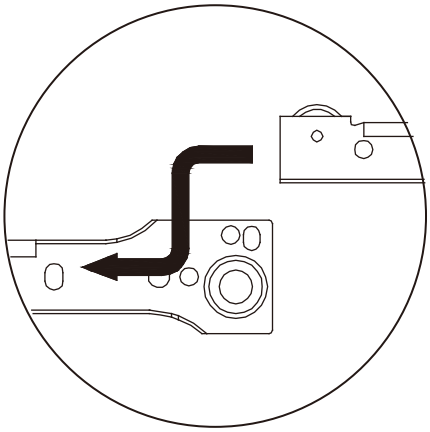

Step 19

E X 2
G X 16
H X 16
K X 2

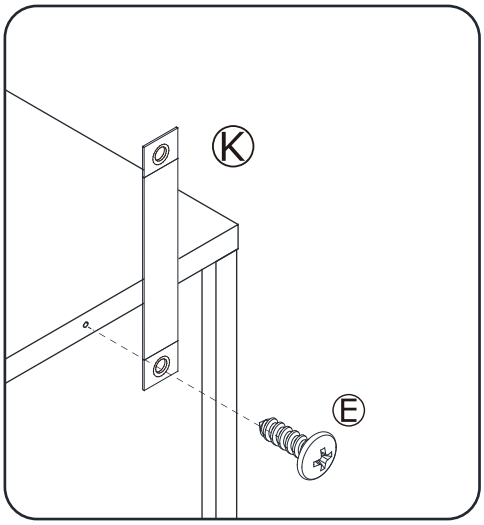

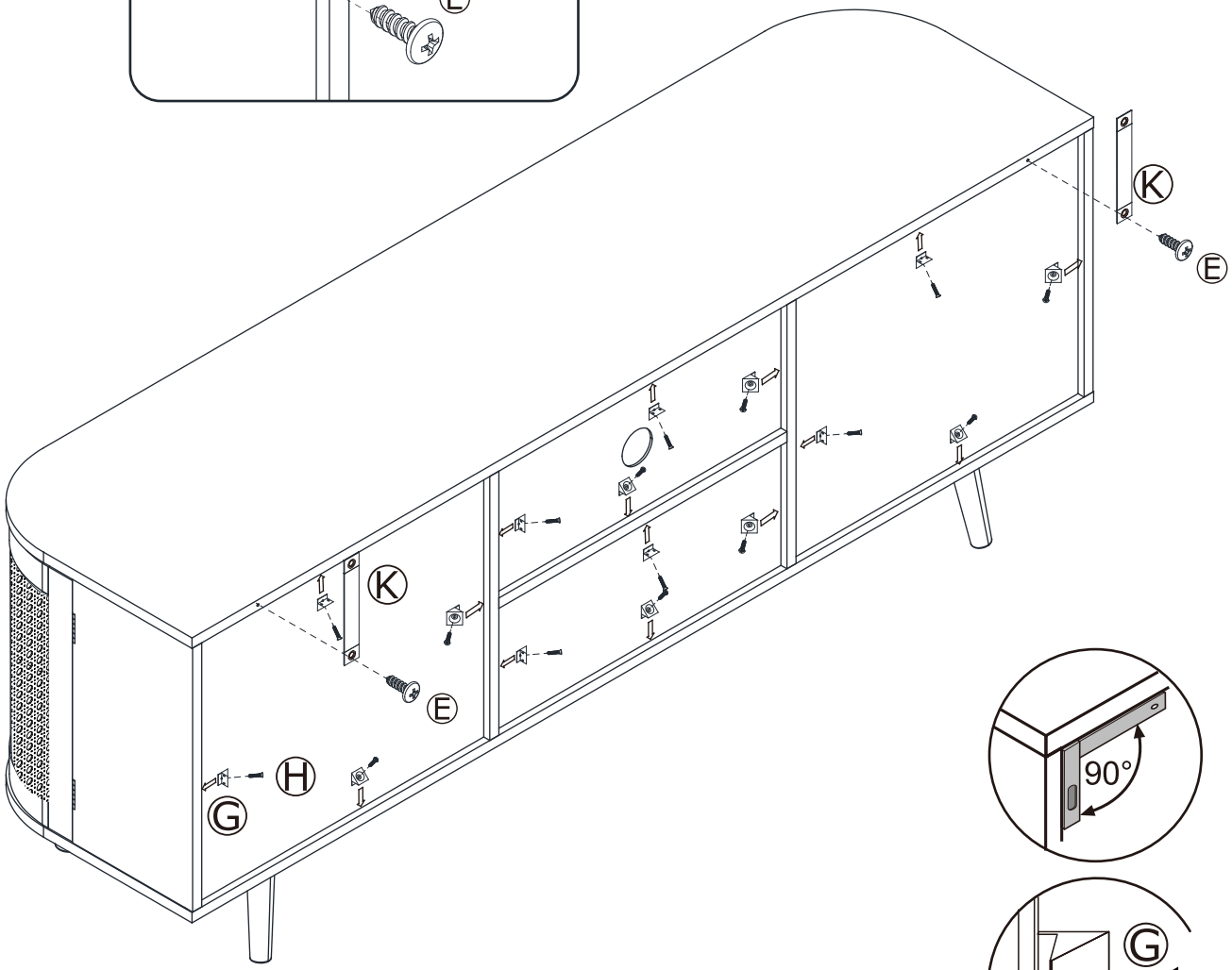

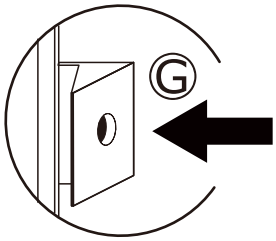

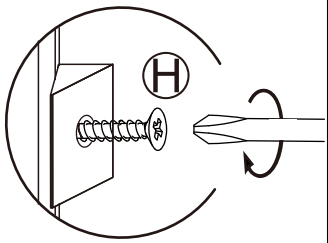

D X 2
M X 2

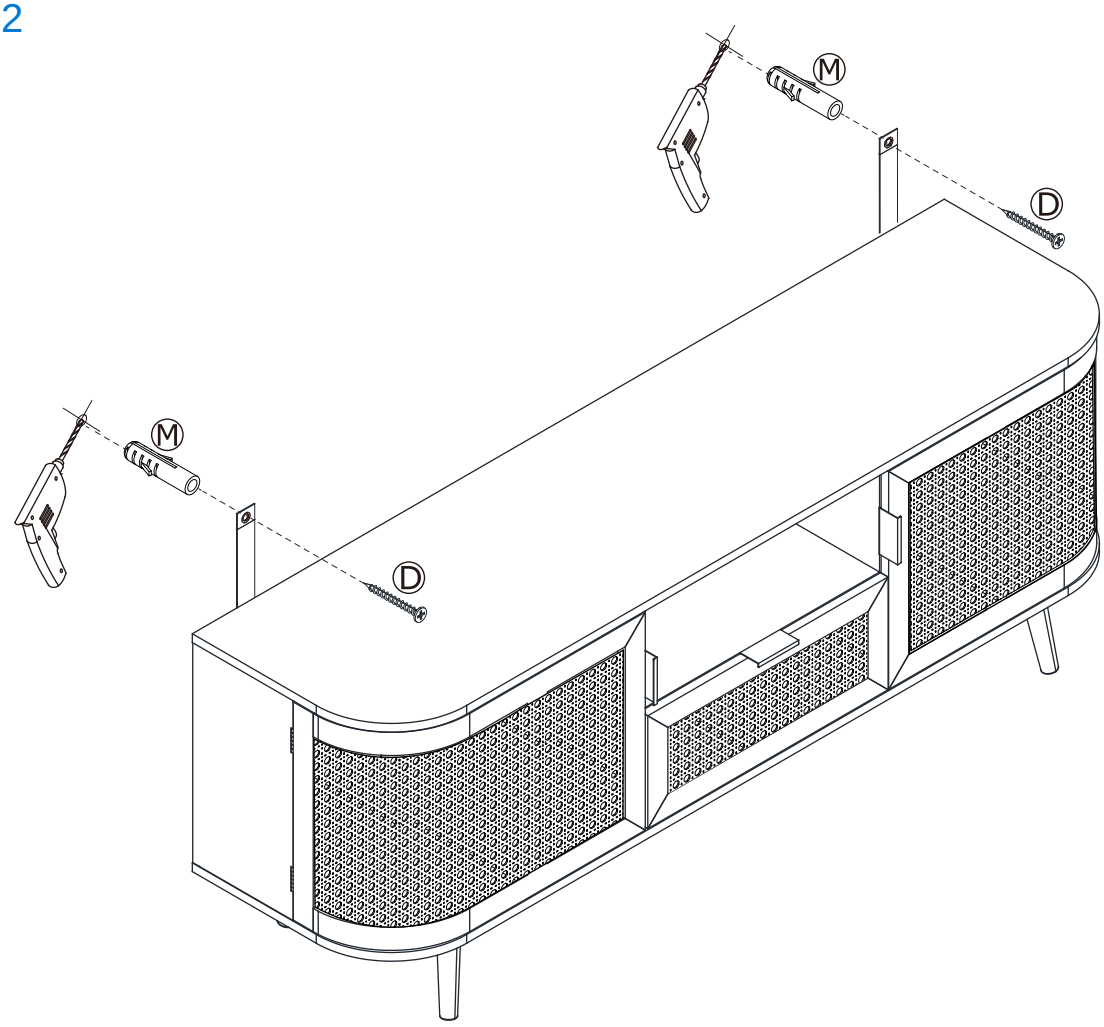

Additional Information:

- For complete product information, images and dimension diagrams please visit the website www.birlea.com
- If you have any issues with your item please contact the retailer directly you purchased it from who will be able to resolve any issues with Birlea.
- Why don't you send us photos of your assembled furniture to info@birlea.com to be shared in our #birleahome feature on Instagram.

Is your cabinet door looking crooked or unevenly spaced? (Cont.)

If you're still having trouble lining everything up, your next step should be to try to adjust the feet slightly to square up the cabinet & doors. Follow the illustrations below:

If the right door appears to be hanging low, you can adjust the adjustable leveler on the front right until the door is better aligned.

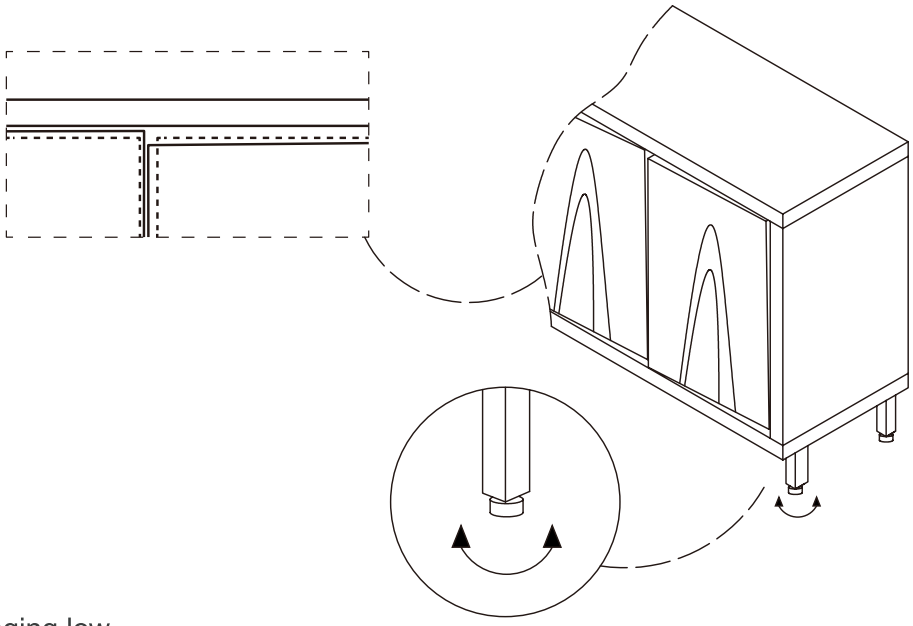

If the left door appears to be hanging low, you can adjust the adjustable leveler on the front left until the door is better aligned.

