Birlea®

Assembly Instructions

Thank you for purchasing a Birlea product

For a chance to win a Love2Shop voucher simply post a picture of your new product on your preferred social channels tagging Birlea Furniture. One winner will be selected at random each month.

*Terms & conditions may apply.

Are you happy with your purchase?

Yes: That's great, we would love to hear more from you. Please leave us a review on our Trustpilot link on the QR code here. Your feedback will be greatly appreciated.

SCAN ME

No: If for any reason there is something missing, indifferent or incorrect with your order, please contact the retailer that you purchased your item from.

Please note that this items build time is around: 10mins

www.birlea.com

Birlea Furniture Limited – Registered Office Unit 6a-1, Birlea Way, West Meadow Rise, Castle Donington, Derbyshire, DE74 2HL, UK

ASSEMBLY INSTRUCTIONS
AXEL FABRIC CHAIR GREY

IMPORTANT : READ THESE INSTRUCTIONS CAREFULLY BEFORE ATTEMPTING TO ASSEMBLE OR USE YOUR AXEL FABRIC CHAIR GREY.

PLEASE KEEP THESE INSTRUCTIONS FOR FUTURE REFERENCE.

ASSEMBLY:
Assembly should be carried out with this item laying flat, not standing upright.
Assemble on a soft, clean surface to prevent damages.
Please use an eraser to remove the numbers printed on the pieces.

HEALTH & SAFETY:
DO NOT use this product if any parts are missing, damaged or worn.
DO NOT use this product unless all fixings are secured.
Always use on a level, even surface.

CARE & MAINTENANCE:
Periodically check all screws & fixings to ensure they are secure.
DO NOT push this product as this will cause damage.
Keep any sharp objects away from this product.

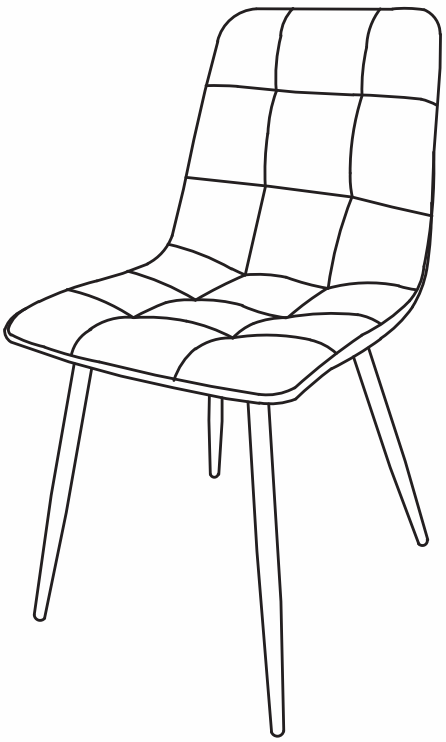

Birlea Furniture Limited – Registered Office Unit 6a-1, Birlea Way, West Meadow Rise, Castle Donington, Derbyshire, DE74 2HL, UK

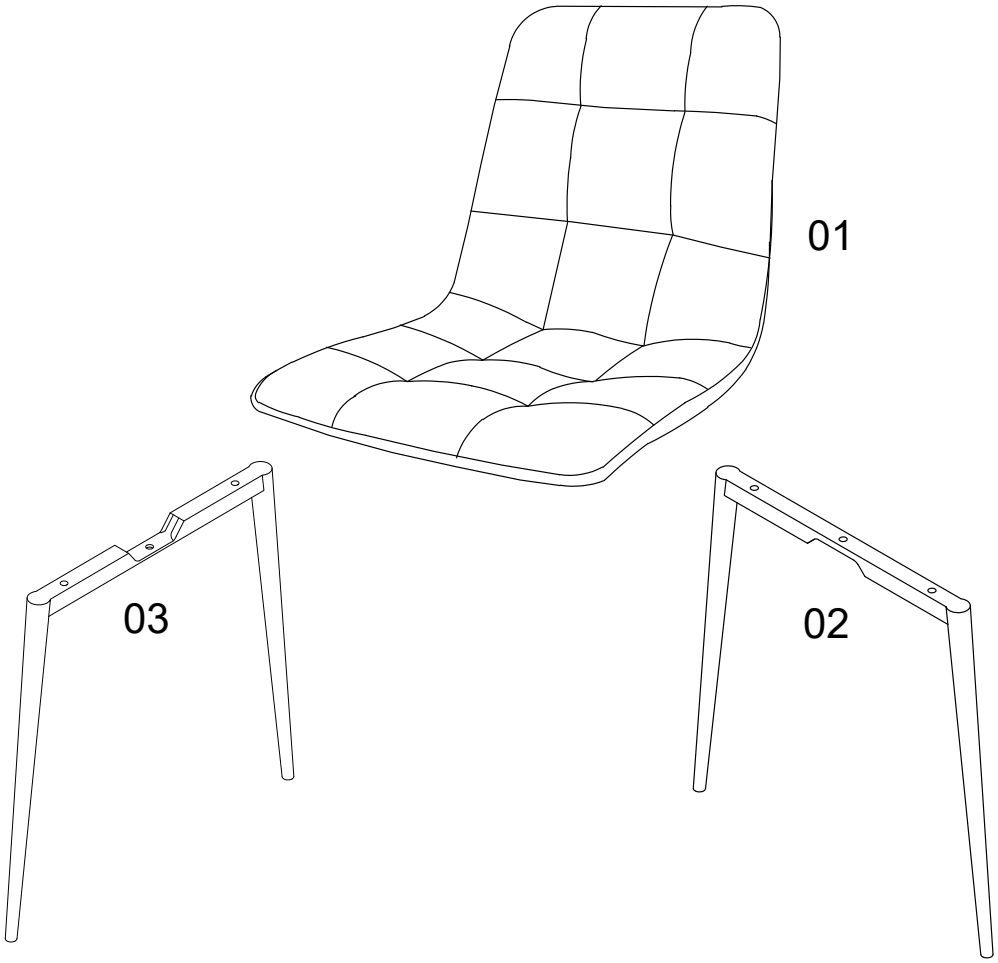

Parts List			
Part	**Descripion**	**Box**	**Qty**
01	Seat	1	1
02	Leg-1	1	1
03	Leg-2	1	1

Hardware List				
Part	**Description**			**Qty**
D	Bolt	M6x20mm		1
E	Bolt	M6x35mm		4
F	Washer	16mm		5
G	Allen key	M4		1

**** Some screws and wooden dowel may remain.**

Birlea®

Birlea Furniture Limited – Registered Office Unit 6a-1, Birlea Way, West Meadow Rise, Castle Donington, Derbyshire, DE74 2HL, UK

Step 1:Please attach the Leg(02) to the Seat(01) with hardware E&F.
ATTENTION:DO NOT FULLY TIGHTEN THE BOLTS AT THIS STAGE!

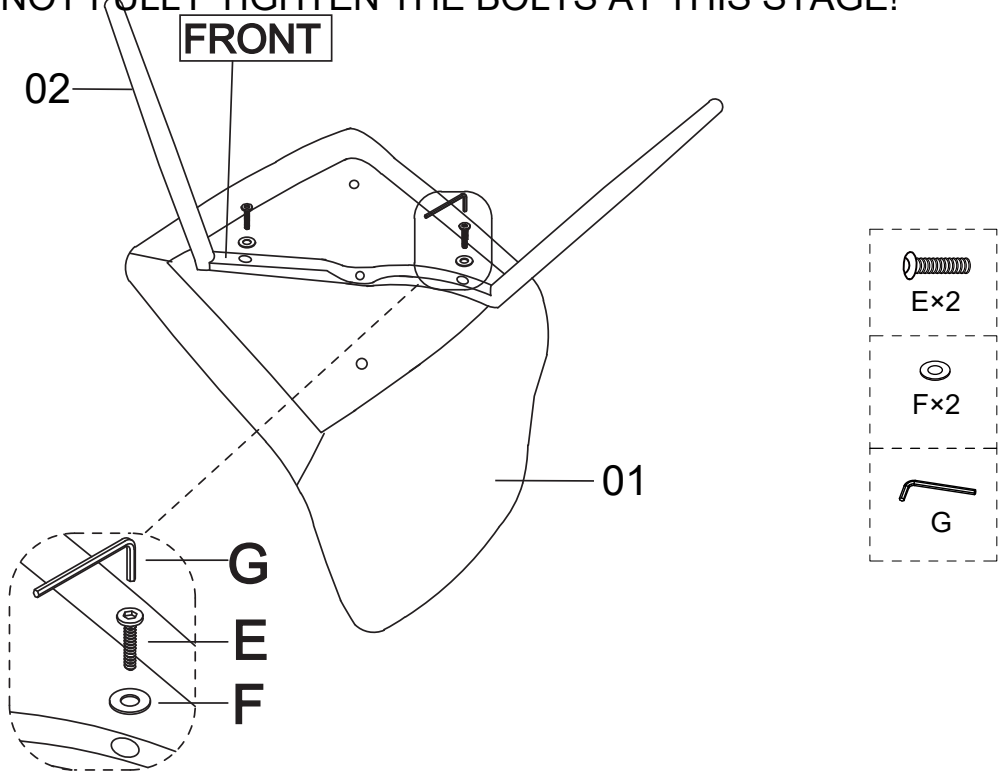

Step 2:Please attach the Leg(03) to the Seat(01) with hardware D,E&F.
ATTENTION:DO NOT FULLY TIGHTEN THE BOLTS AT THIS STAGE!

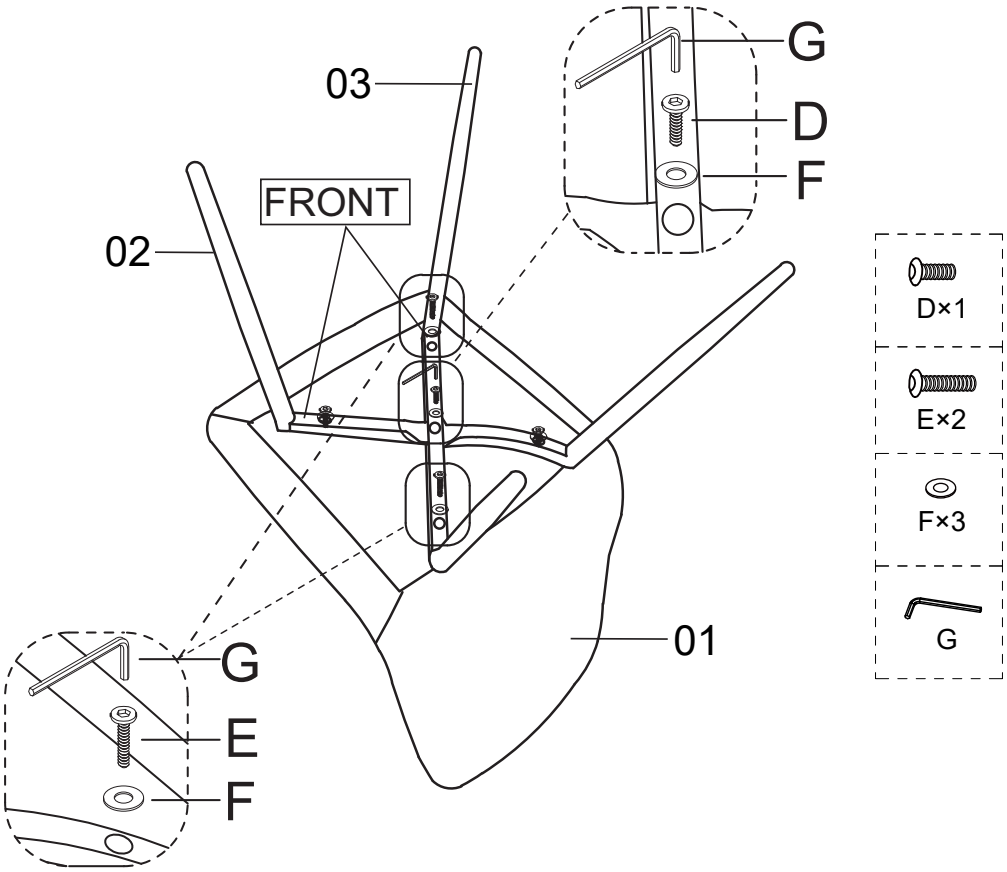

Birlea Furniture Limited – Registered Office Unit 6a-1, Birlea Way, West Meadow Rise, Castle Donington, Derbyshire, DE74 2HL, UK

Step 3:Please fully tighten all the bolts.

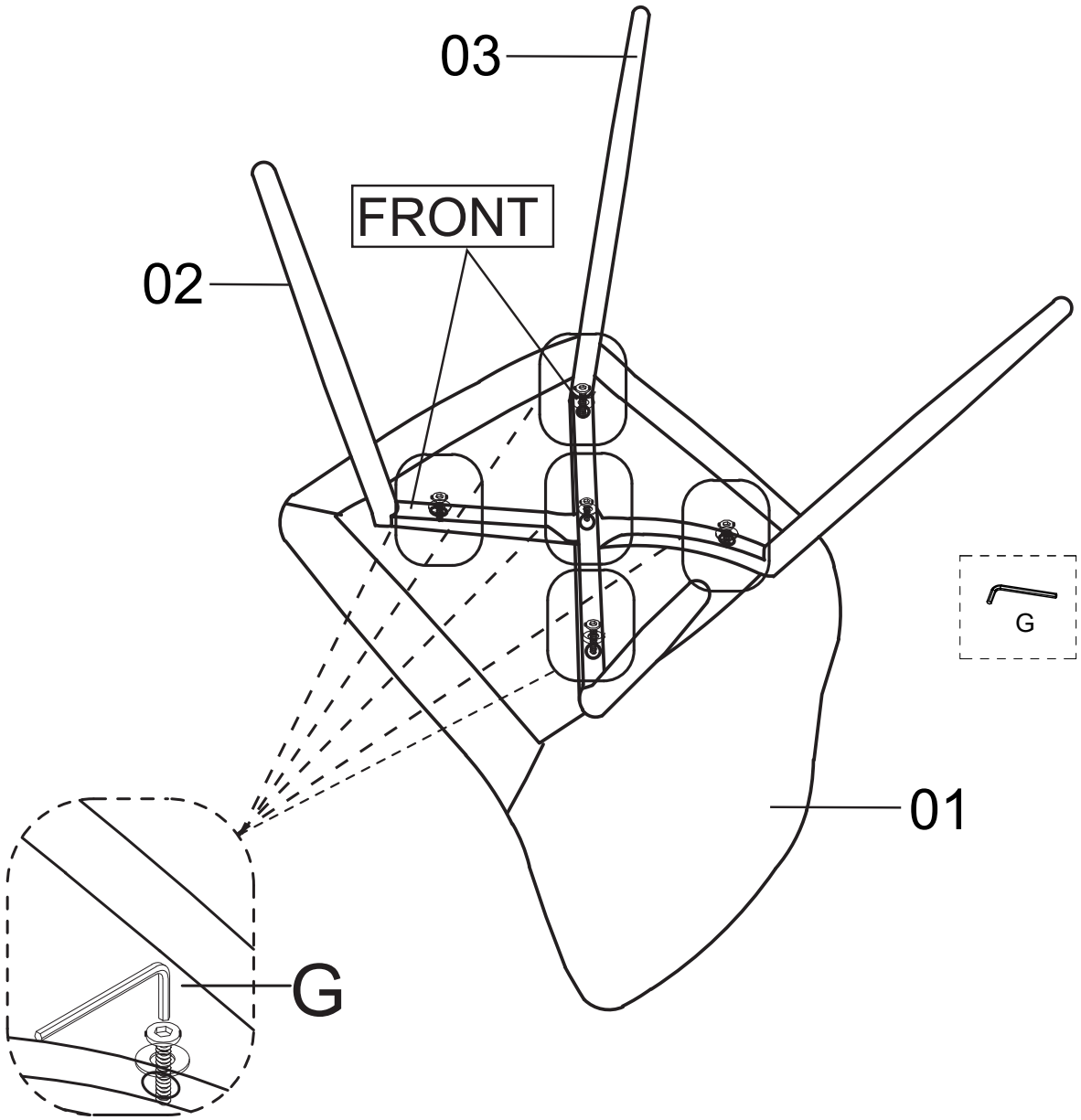

Additional Information:

- For complete product information, images and dimension diagrams please visit the website www.birlea.com
- If you have any issues with your item please contact the retailer directly you purchased it from who will be able to resolve any issues with Birlea.
- Why don't you send us photos of your assembled furniture to info@birlea.com to be shared in our #birleahome feature on instagram.
- WARNING: If this bed is placed on a non-carpeted floor you must place some protection under all leg to stop the bed from moving. If this is not adhered to there is no guerantee if the bed frame collapse.

Birlea®

Birlea Furniture Limited – Registered Office Unit 6a-1, Birlea Way, West Meadow Rise, Castle Donington, Derbyshire, DE74 2HL, UK