NEXT

LILLY CHAIR
Y43799-N57559-AT9353-U87234-F98506-G96599-251718

Assembly instructions

Actual product size
H76.5×W79×D90cm

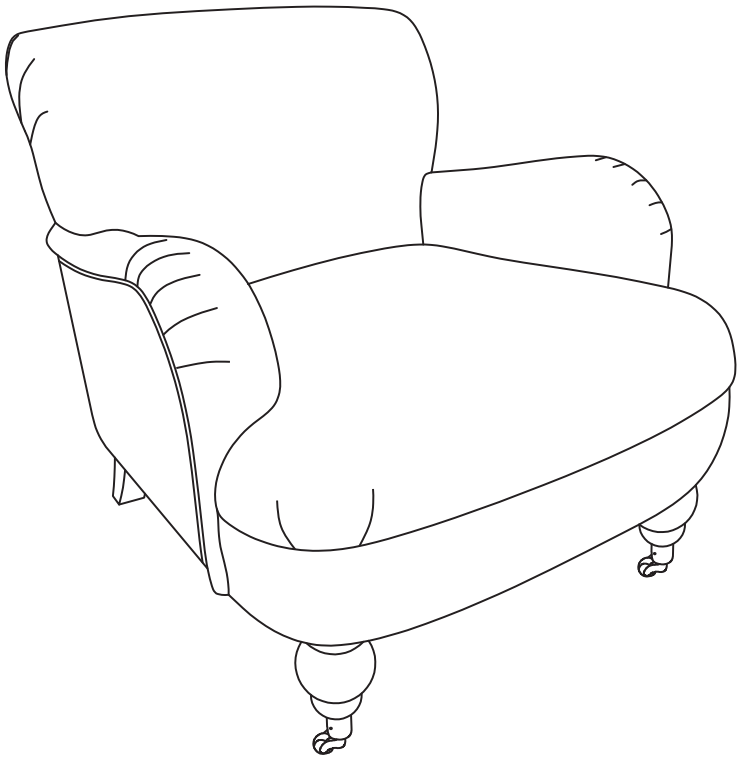

Need Help ?

With: Assembly instruction
Missing or damaged parts

CALL: 0333 777 8999

IMPORTANT - RETAIN FOR FUTURE REFERENCE

Produced in China for Next Retail Ltd.
Y43799-N57559-AT9353-U87234-F98506-G96599-251718-2025-V1.

BEFORE YOU START

Number of people required to assemble
One people are required to assemble this item
Time to assemble: 30 minutes





Item No.	Fabric name - leg	Fabric composition
Y43799	RELAXED LINEN LOOK FLORAL DARK GREEN - ASH GREY LEG	85% Polyester, 12% Cotton, 3% Linen
N57559	BRUSHED MARL RESTORED LEAF MID NATURAL -OAK EFFECT LEG GOLDEN CASTOR	100% polyester
AT9353	COTSWOLD CHENILLE MID BLUE - ASH GREY LEGS	100% polyester
U87234	TWEEDY PLAIN LIGHT NATURAL - ASH GREY EFFECT LEG WITH GOLD CASTOR	100% polyester
F98506	CHENILLE STRIPE SLATE BLUE AND WHITE-ASH GREY LEG	100% polyester
G96599	THE NEW WINTER KEW GARDENS PRINT-ASH GREY LEG	100% polyester
251718	CHENILLE BOUCLE CHENILLE PICNIC FLORAL ASH GREY LEG GOLDEN CASTOR	87% Polyester, 13% Cotton

Do's

We suggest you spend a short time reading through this leaflet before you start. When you are ready to start, make sure that you have the right tools and plenty of space.
Unwrap all packaging materials and place the components on a clean surface to protect it from damage. We recommend that the packaging is used to protect the surfaces during assembly.
Carefully check that you have all the parts before beginning assembly.
Ensure the product is fully assembled as illustrated and all fixings fully tightened before use. Check fixings regularly to ensure they remain tight.
Always wipe dry after cleaning.
To clean your item, please use a soft cloth slightly dampened with water and wipe clean. Then buff with a dry clean cloth.

Warnings

We suggest you retain these instructions for future reference.
Keep fittings out of children's reach and keep children well away from construction area. This product should only be used on firm level ground
Please periodically check all fittings and re-tighten as necessary.
Avoid exposing the furniture to excessive heat or direct sunlight as this can cause cracking of the wood and deterioration of the colour.
Unwrap all packaging materials and place the components on top of the carton box or on a clean floor to protect it from damage.

Home Service Technicians
If you have a fault with your product, please contact our customer service team on **0333 777 8999.** If you have had the product for 28 days or less you may be offered a replacement, refund or for a fully trained home service technician to visit your home to assess the fault and repair the product where possible. If you have had the product for more than 28 days we will send an independant home service technician to review and repair the product where possible and recommend further action.

Dont's

Never allow any kind of liquid to remain on your furniture. Absorption can cause wood to warp or finishes to de-laminate.
Do not stand or lean back on your chairs.
Do not use silicone based furniture polish. Silicone in furniture polishes can break down the lacquer finish.

Missing parts
If you are missing any fixtures and fittings for your product.. Please contact our customer service team on 0333 777 8999 and they will be happy to arrange for a replacement to be sent to you free of charge.

You can write to us at
Home Customer Services
Next Retail Ltd
Desford Road,
Leicester,
LE19 4AT

To view our full furniture range please visit **www.next.co.uk**

Need Help ?

With: Assembly instruction
Missing or damaged parts
CALL: 0333 777 8999

GETTING TO KNOW YOUR PRODUCT

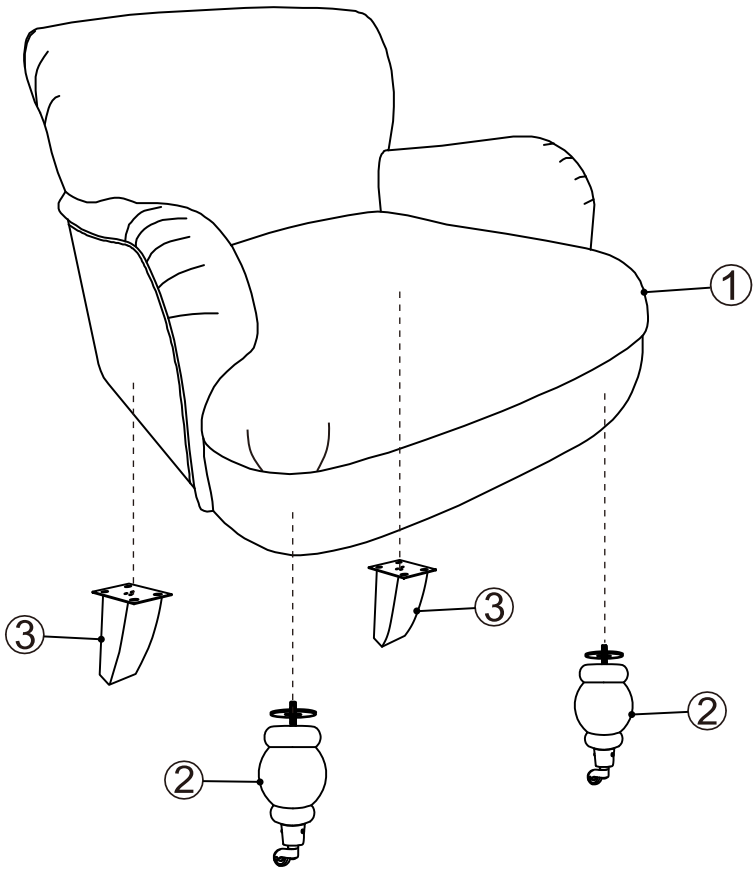

Components supplied. Please use this guide if you require replacement parts.

Ref	Dimension	Visual	Qty
1	Seat: H65xW79xD86CM	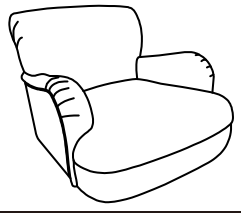	1
2	Front Legs: 19.5x ϕ 8.8CM	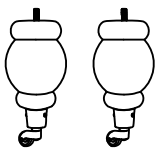	2
3	Back Legs: 12x6/4.5 x3.5/4.5CM	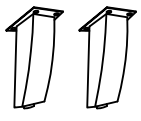	2

Fixtures and fittings supplied (actual size)

Ref	Dimension	Qty	Spare
A	M6X20mm	8	2
B	6X80mm	1	0

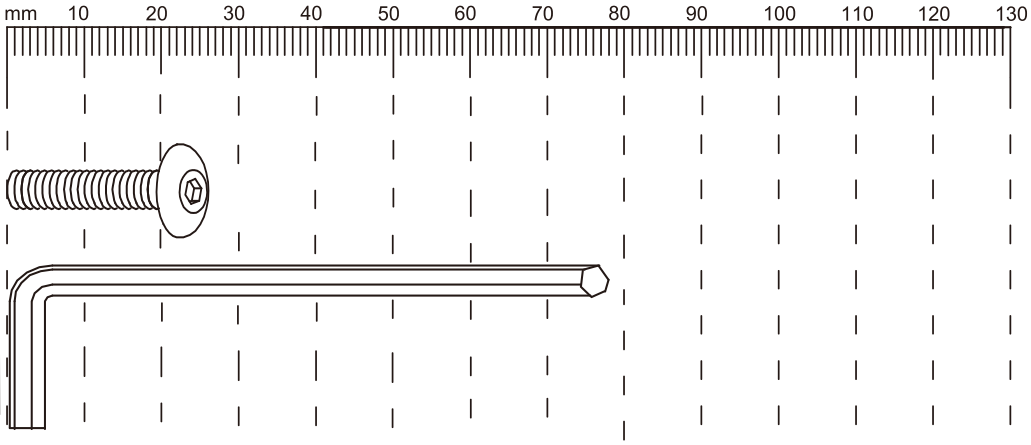

1.

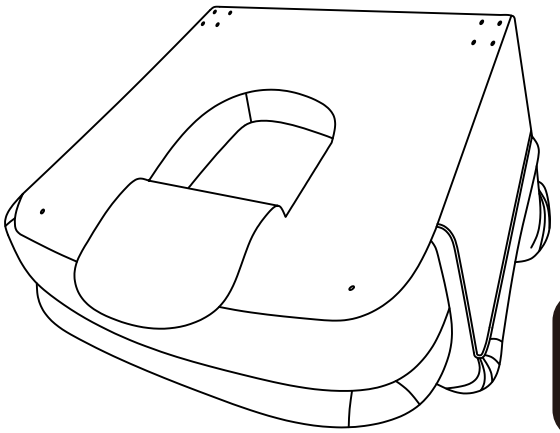

WARNING!

Open the bottom of the chair and take the legs out.

2.

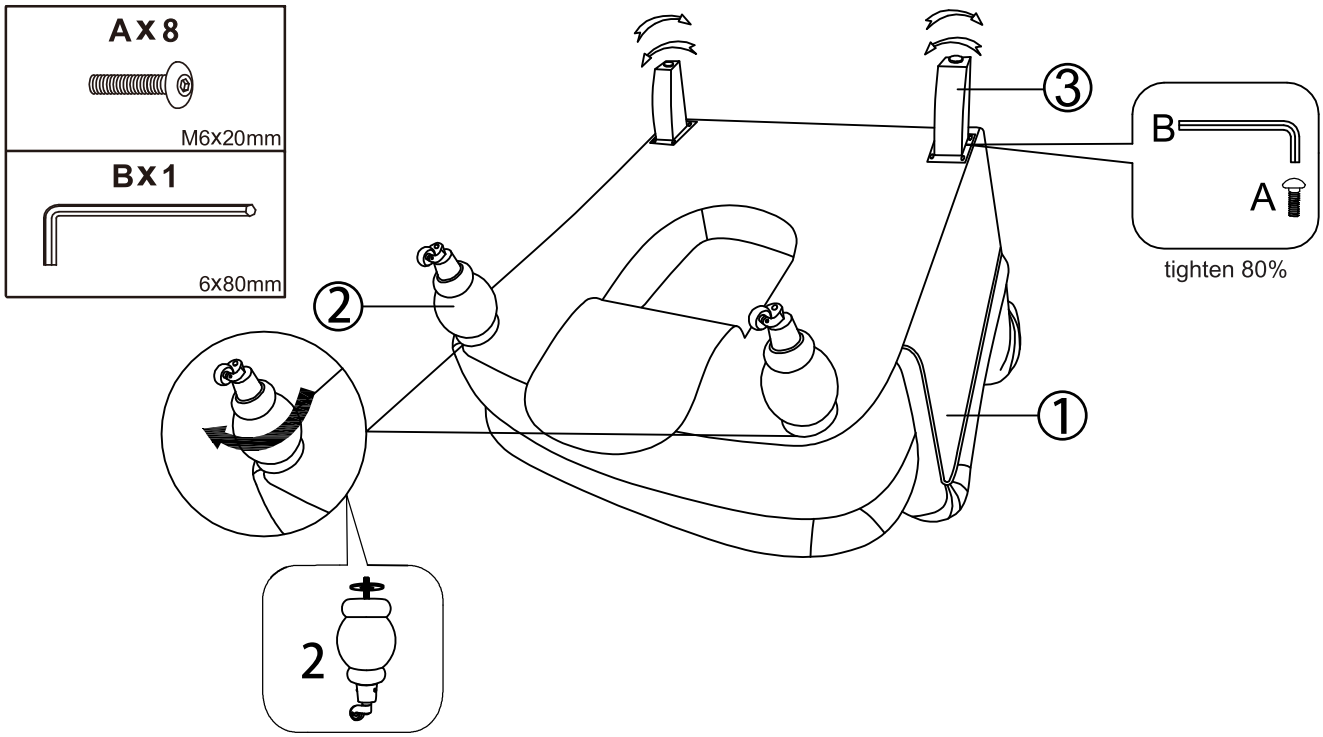

3.

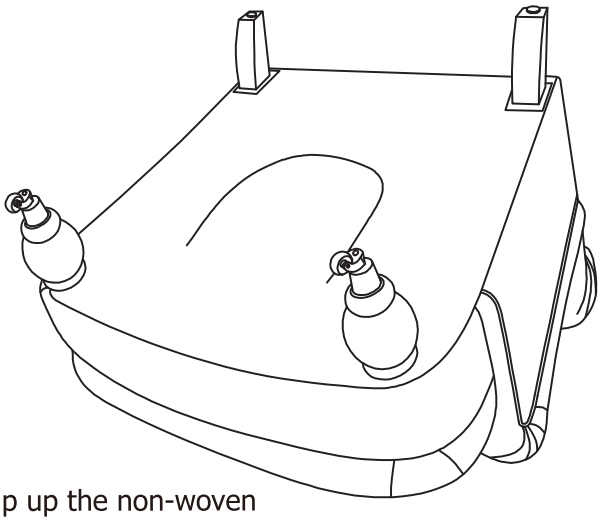

In the end , zip up the non-woven cloth underneath the seat.

4.

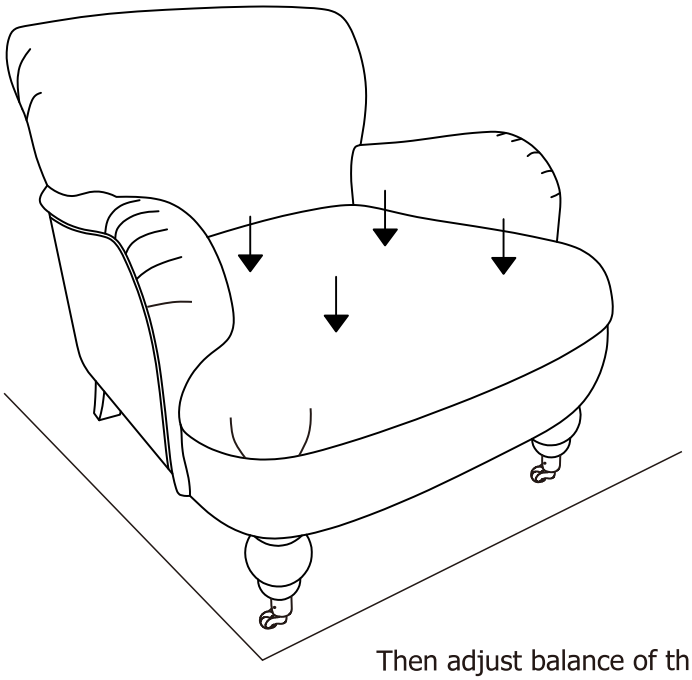

Then adjust balance of this chair, tighten all the screws to 100%.

NEXT

LILLY CHAIR
Y43799-N57559-AT9353-U87234-F98506-G96599-251718

Assembly instructions

Actual product size
H76.5×W79×D90cm

CAUTION: Maximum weight capacity of this chair is 130kg.

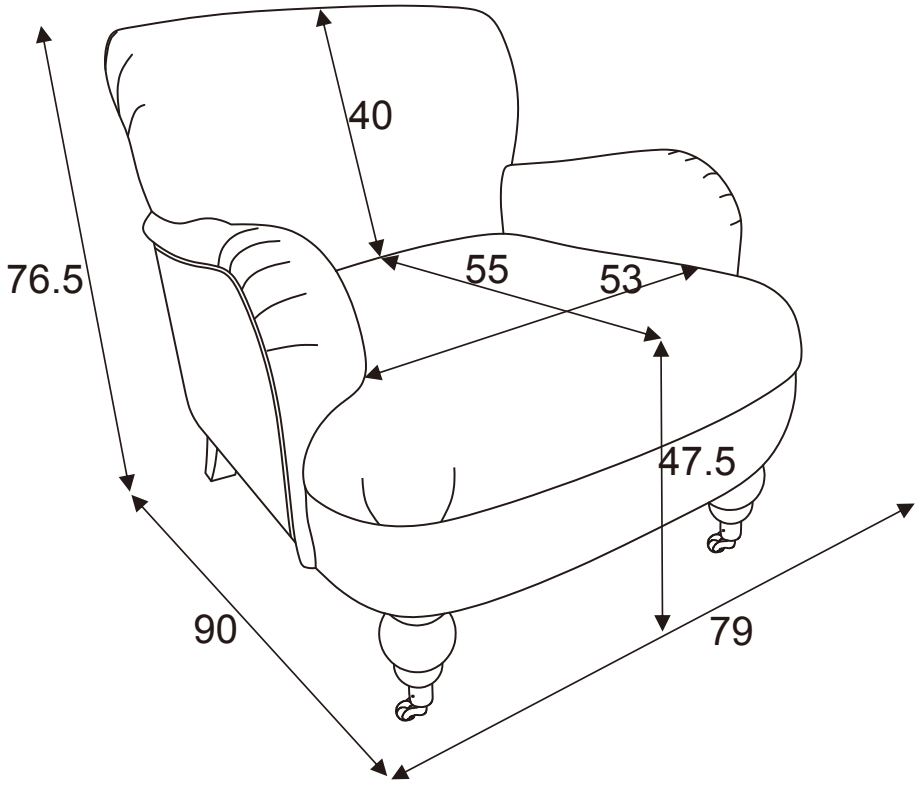

Important Flooring Information: This item features metal castors designed for ease of movement. To prevent scratches or indentations to hard and wooden floors, we strongly recommend using castor cups or a protective rug.