NEXT

WILSON II ACCENT CHAIR

Assembly instructions

Actual product size
H94xW77xD78CM

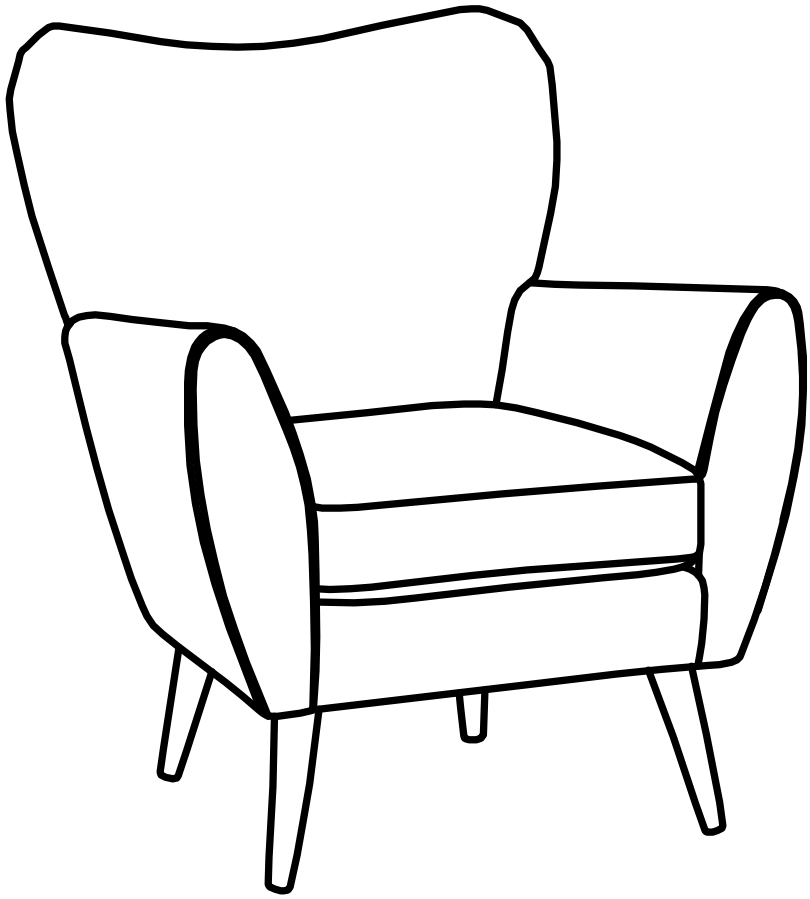

Need Help?

With: Assembly instrucitons
Missing or damaged parts
CALL: 0333 777 8999

IMPORTANT RETAIN FOR FUTURE REFERENCE

Produced in China for Next Retail Ltd. 2026-V1

NEXT

WILSON II ACCENT CHAIR
Assembly instructions

Actual product size
H94xW77xD78CM

Item number	Fabric name-Leg	Fabric composition
U34238	Chunky Chenille Dark Grey with Oak effect legs	100% polyester
U34282	Chunky Chenille Light Grey with Oak effect legs	100% polyester
U34239	Chunky Chenille Navy with Oak effect legs	100% polyester
U69622	Chunky Chenille Oyster with Ash effect legs	100% polyester
677484	Soft Velvet Ochre with Dark Oak Effect Legs	100% polyester
C53588	Tweedy Plain Mid Natural with Oak effect legs	100% polyester
D55520	Soft Velvet Rust with Dark Oak Effect Legs	100% polyester
D55555	Tailored Chenille Mid Grey with Oak effect legs	100% polyester
D55559	Soft Velvet Sage Green with Dark Oak Effect Legs	100% polyester
C75796	Fine Chenille Dark Teal with Oak effect legs	100% polyester
C81943	Tweedy Plain Navy with Oak effect legs	100% polyester
D55521	Tweedy Plain Light Natural with Oak effect legs	100% polyester
D55522	Soft Velvet Navy with Dark Oak Effect Legs	100% polyester
D55523	Geo Grey with Oak effect legs	100% polyester
D91497	Plush Chenille Moss with Dark Oak Effect Legs	100% polyester
D91498	Plush Chenille Slate Blue with Oak effect legs	100% polyester
D91501	Geo Natural with Oak effect legs	100% polyester
D91518	Versatile Check Stirling Red with Oak effect legs	100% polyester
N57548	Chunky Weave Mid Natural with Oak Effect legs	100% polyester
B27309	Geo Texture Boucle Natural with Dark Oak Effect Legs	100% polyester
B39908	Chunky Geo Stripe Sage with Oak Effect Leg	100% polyester
B38956	Mini Stripe Geo Ochre with OAK Effect Legs	100% polyester
AM0739	Vintaged Faux Leather Light Brown with Dark Oak Effect Legs	100% polyester
F80742	Alaska Faux Fur Slate with Dark Oak Leg	100% polyester
F66225	Soft Velvet Light Blue with Oak Effect Leg	100% polyester
F66227	Woven Checkerboard Monochrome with Black Leg	100% polyester
W66557	Dry Handle Boucle Rust with Extra Dark Oak Leg	100% polyester
W66559	Relaxed Chenille Cord Green with Dark Oak Effect Legs	100% polyester
V27392	Oslo Faux Fur Light Natural with OAK Leg	100% polyester
G70098	Distressed Check Navy Blue with Extra Dark Oak Effect Leg	100% polyester
G89501	Heritage Check Dark Green with Oak Effect Leg	100% polyester
G96607	Drifted Geo Multi with Oak Effect Leg	100% polyester
Y43800	Geo Chenille Pink with Dark Oak Effect Legs	100% polyester
419447	Soft Twill Navy Blue with Extra Dark Oak Effect	100% polyester
388637	Soft Twill Rust Brown with Extra Dark Oak Effect	100% polyester
419459	Soft Twill Ochre Yellow with Extra Dark Oak Effect	100% polyester
509343	Linen Look Geo Butter Yellow with Dark Oak Effect Legs	100% polyester
AK4113	Opulent Velvet Print Tropical Jungle Orange with Oak Effect Leg	100% polyester

IMPORTANT RETAIN FOR FUTURE REFERENCE

Need Help?
With: Assembly instrucitons
Missing or damaged parts
CALL: 0333 777 8999

BEFORE YOU START

Number of people required to assemble
One people are required to assemble this item
Time to assemble: 15 minutes





Do's

We suggest you spend a short time reading through this leaflet before you start.

When you are ready to start, make sure that you have the right tools and space.

Unwrap all packaging materials and place the components on a clean surface to protect it from damage,

We recommend that the packaging is used to protect the surfaces during assembly.

Carefully check that you have all the parts before beginning assembly. Ensure the product is fully assembled as illustrated and all fixings fully tightened before use. Check fixings regularly to ensure they remain tight. Always wipe dry after cleaning.

For the PU chairs, please lightly brush clean or lightly wipe with a slightly dampened cloth. Keep away from strong heat sources. Occasional overall cleaning should be carried out approximately once a month by using a slightly damp-ened soft cloth. Then buff with a dry clean soft cloth.

Don'ts

Never allow any kind of liquid to remain on your furniture. Absorption can cause wood to warp or finishes to de-laminate.

Do not stand or lean back on your chairs.

Do not use silicone based furniture polish. Silicone in furniture polishes can break down the lacquer finish.

Missing parts

If you are missing any fixtures and fittings for your product please contact our customer service team on 0333 777 8999 and they will be happy to arrange for a replacement to be sent to you free of charge.

Warnings

We suggest you retain these instructions for future reference. Keep fittings out of children's reach and keep children well away from construction area.

This product should only be used on firm level ground.

Please periodically check all fittings and re-tighten as necessary.

Avoid exposing the furniture to excessive heat or direct sunlight as this can cause cracking of the wood and deterioration of the colour.

Unwrap all packaging materials and place the components top of the carton box or on a clean floor to protect it from damage.

Home service technicians

If you have a fault with your product please contact ourcustomer service team on 0333 777 8999. If you have had the product for 28 days or less you may be offered a replacement,refund or for a fully trained home service technician to visit your home to assess the fault and repair the product where possible.

If you have had the product for more than 28 days we will send an independant home service technician to review and repair the product where possible and recommend further action.

You can write to us at
Home Customer Services
Next Retail Ltd,
Desford Road,
Leicester
Le194 AT

To view our full furniture range please vis it www.next.co.uk

Need Help?

With: Assembly instrucitons
Missing or damaged parts
CALL: 0333 777 8999

GETTING TO KNOW YOUR PRODUCT

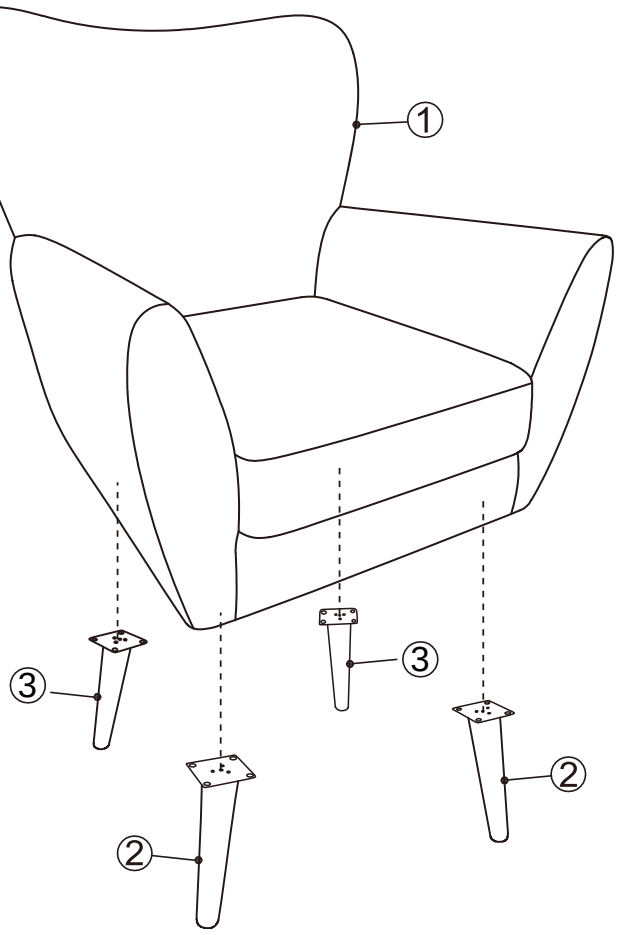

Components supplied. Please use this gui de if you require replacement parts.

Ref	Dimension	Visual	Qty
1	Seat: D78xW77xH73CM		1
2	Front Legs: 21x5.5x3.5CM		2
3	Back Legs: 21x5.5x3.5CM	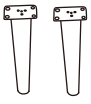	2

WILSON II ACCENT CHAIR
Assembly instructions

Fixtures and fittings supplied (actual size)

Ref	Dimension	Qty	Spare
A	M6x25mm	16	2
B	M6x80mm	1	0

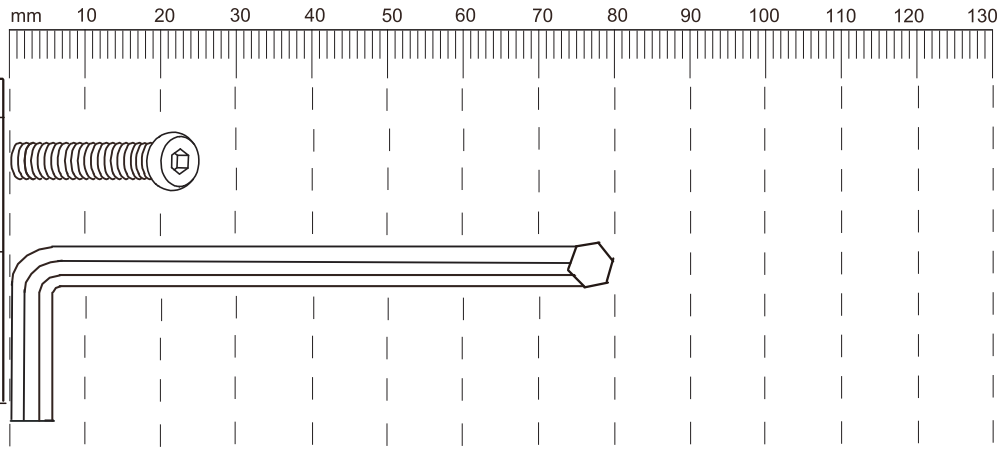

1

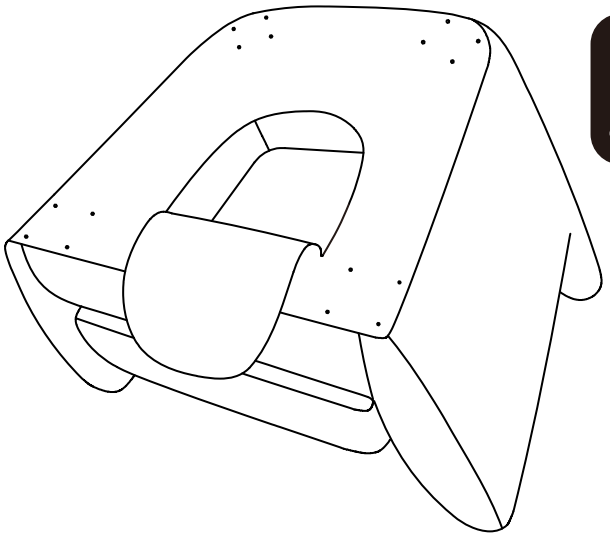

WARNING!

Open the bottom of the chair and take the legs out.

2

Ax16
 M6x25mm
Bx1
 M6x80mm

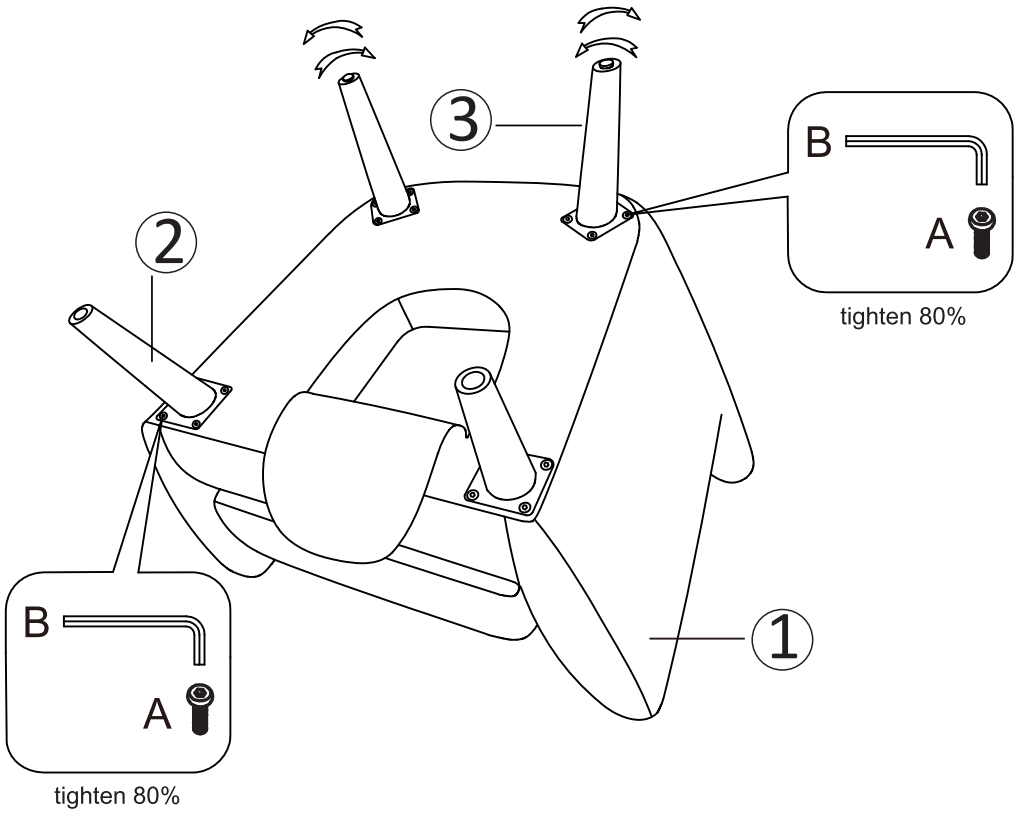

3

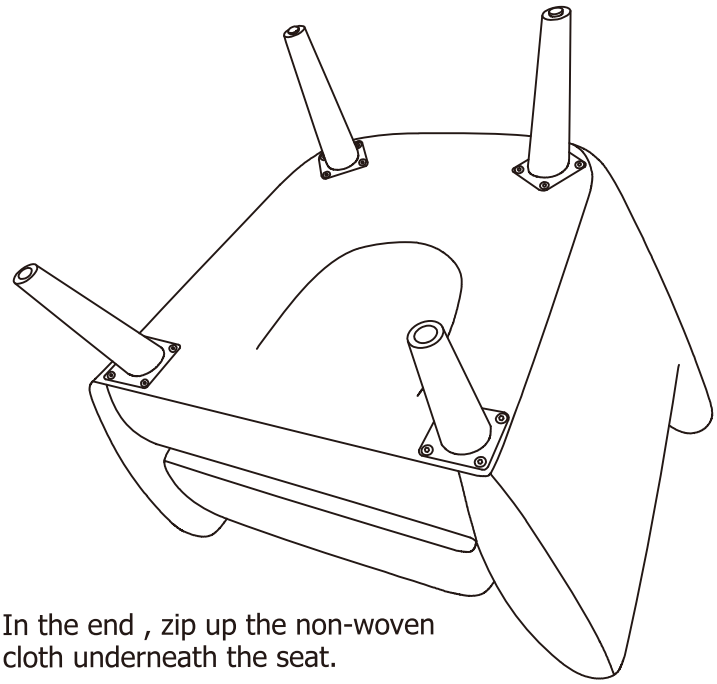

In the end , zip up the non-woven cloth underneath the seat.

4

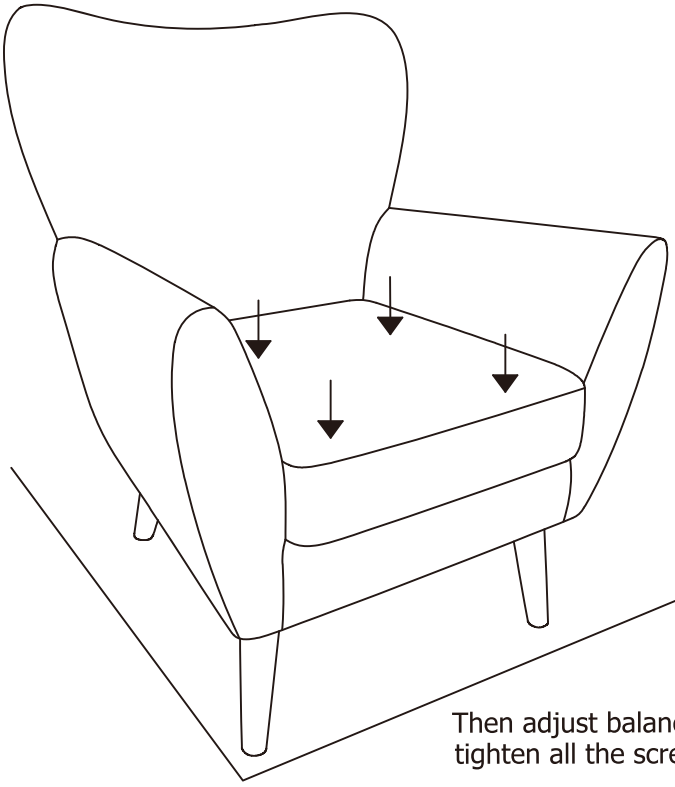

Then adjust balance of this chair, tighten all the screws to 100%.

NEXT

WILSON II ACCENT CHAIR

Assembly instructions

Actual product size
H94xW77xD78CM

CAUTION: Maxium weight capacity of this chair is 130kg.

