NEXT

WILSON STOOL

Assembly instructions

Actual product size
H44xW60 xD40CMCM

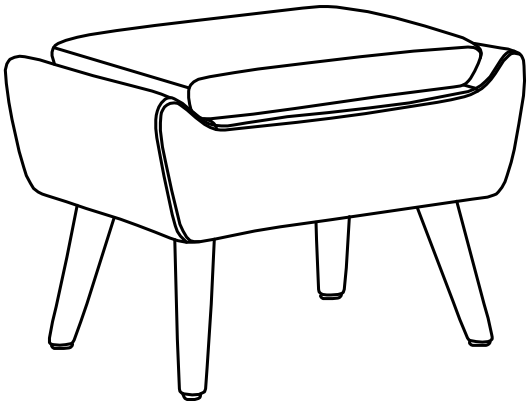

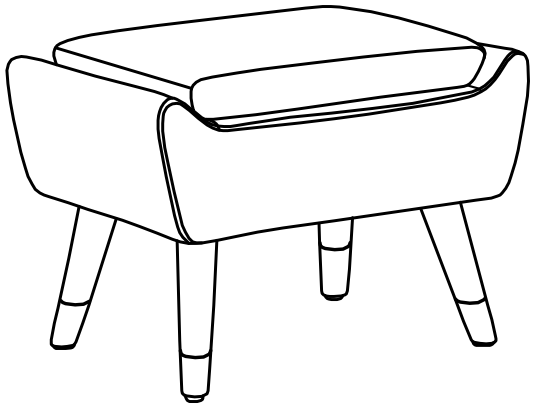

(Only for G96589/Y82633)

Item number	Fabric name-Leg	Fabric composition
AM0744	Chunky Chenille Light Grey with Oak Legs	100% polyester
AM0745	Chunky Stripe Geo Grey with Oak Legs	100% polyester
AC7173	Soft Velvet Ochre with Bronx Legs	100% polyester
W42848	Oslo Faux Fur Light Natural with Oak effect leg	100% polyester
W42852	Soft Velvet Navy Blue with Dark Bronx Oak Effect	100% polyester
W42853	Soft Velvet Rust brown with Dark Bronx Oak Effect	100% polyester
G96588	Chunky Weave Mid Natural with Oak Effect Leg	100% polyester
G96589	Multi Chenille Multi with Oak Effect Leg with gold cap	100% polyester
V55615	Heritage Check Dark Green with Oak Effect Leg	100% polyester
Y82633	Broken Geo Chenille Pink with Oak Effect Leg golden cap	100% polyester
Y82634	Relaxed Chenille Cord Forest Green with Dark Bronx Oak Effect Leg	100% polyester
509293	Soft Twill Navy Blue with Extra Dark Oak Effect	100% polyester
509342	Soft Twill Rust Brown with Extra Dark Oak Effect	100% polyester
509583	Soft Twill Soft Twill Ochre Yellow with Extra Dark Oak Effect	100% polyester

IMPORTANT RETAIN FOR FUTURE REFERENCE

Need Help?

With: Assembly instrucitons
Missing or damaged parts
CALL: 0333 777 8999

Produced in China for Next Retail Ltd. 2025-V1

BEFORE YOU START

Number of people required to assemble
One people are required to assemble this item
Time to assemble: 15 minutes





Do's

We suggest you spend a short time reading through this leaflet before you start.

When you are ready to start, make sure that you have the right tools and space.

Unwrap all packaging materials and place the components on a clean surface to protect it from damage,

We recommend that the packaging is used to protect the surfaces during assembly.

Carefully check that you have all the parts before beginning assembly. Ensure the product is fully assembled as illustrated and all fixings fully tightened before use. Check fixings regularly to ensure they remain tight. Always wipe dry after cleaning.

For the PU chairs, please lightly brush clean or lightly wipe with a slightly dampened cloth. Keep away from strong heat sources. Occasional overall cleaning should be carried out approximately once a month by using a slightly damp-ened soft cloth. Then buff with a dry clean soft cloth.

Don'ts

Never allow any kind of liquid to remain on your furniture. Absorption can cause wood to warp or finishes to de-laminate.

Do not stand or lean back on your chairs.

Do not use silicone based furniture polish. Silicone in furniture polishes can break down the lacquer finish.

Missing parts

If you are missing any fixtures and fittings for your product please contact our customer service team on 0333 777 8999 and they will be happy to arrange for a replacement to be sent to you free of charge.

Warnings

We suggest you retain these instructions for future reference. Keep fittings out of children's reach and keep children well away from construction area.

This product should only be used on firm level ground.

Please periodically check all fittings and re-tighten as necessary.

Avoid exposing the furniture to excessive heat or direct sunlight as this can cause cracking of the wood and deterioration of the colour.

Unwrap all packaging materials and place the components top of the carton box or on a clean floor to protect it from damage.

Home service technicians

If you have a fault with your product please contact ourcustomer service team on 0333 777 8999. If you have had the product for 28 days or less you may be offered a replacement,refund or for a fully trained home service technician to visit your home to assess the fault and repair the product where possible.

If you have had the product for more than 28 days we will send an independant home service technician to review and repair the product where possible and recommend further action.

You can write to us at
Home Customer Services
Next Retail Ltd,
Desford Road,
Leicester
Le194 AT

To view our full furniture range please vis it www.next.co.uk

Need Help?

With: Assembly instrucitons
Missing or damaged parts
CALL: 0333 777 8999

GETTING TO KNOW YOUR PRODUCT

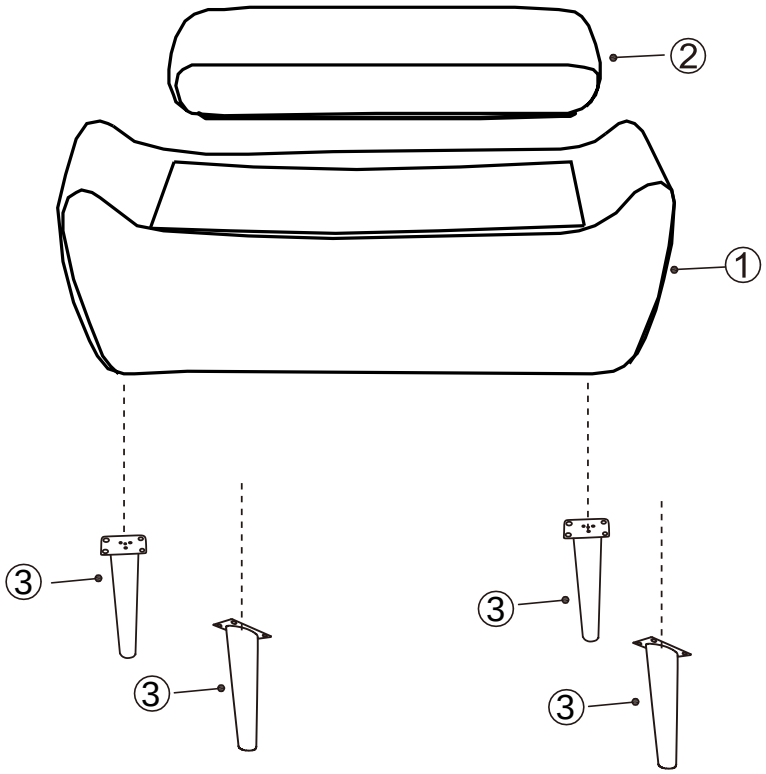

Components supplied. Please use this gui de if you require replacement parts.

Ref	Dimension	Visual	Qty
1	Seat: H20xW60xD44CM	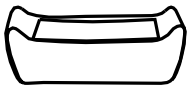	1
2	Back Cover: 9.5x50x35.5CM	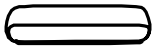	1
3	Wooden Legs: 18x4.5x2.5CM		4

WILSON STOOL
Assembly instructions

Fixtures and fittings supplied (actual size)

Ref	Dimension	Qty	Spare
A	M6x20mm	16	2
B	M6x80mm	1	0

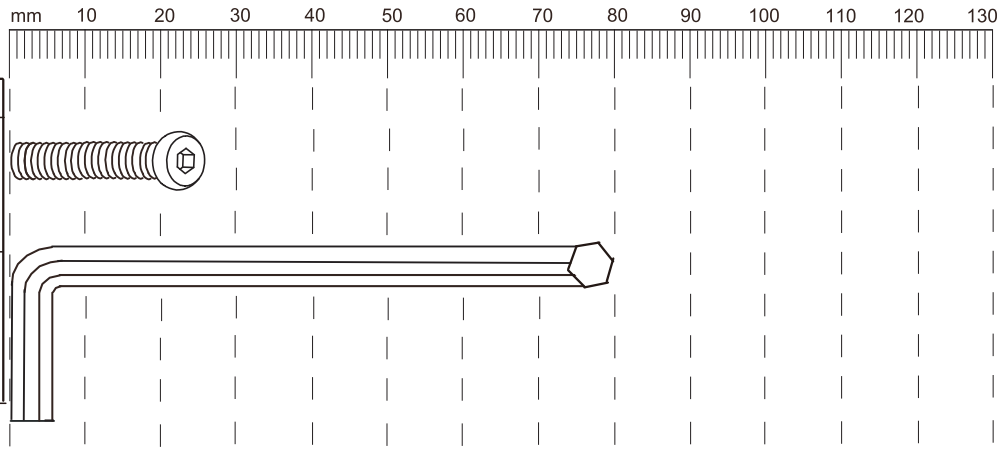

WILSON STOOL
Assembly instructions

1

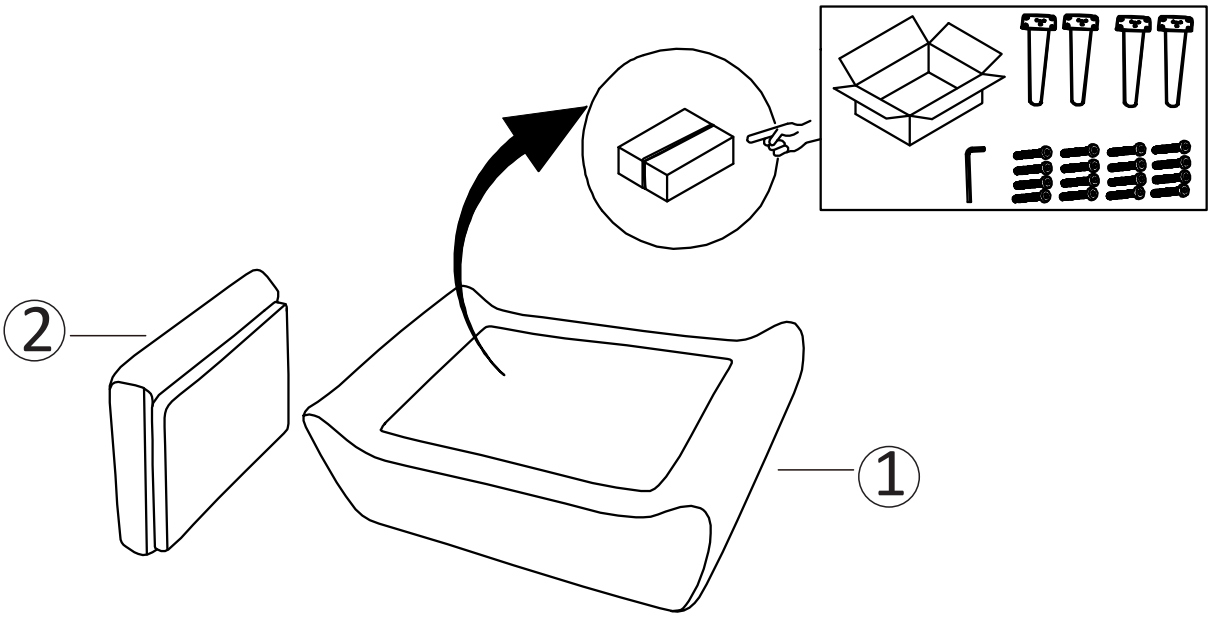

2

Ax16
 M6x20mm
Bx1
 M6x80mm

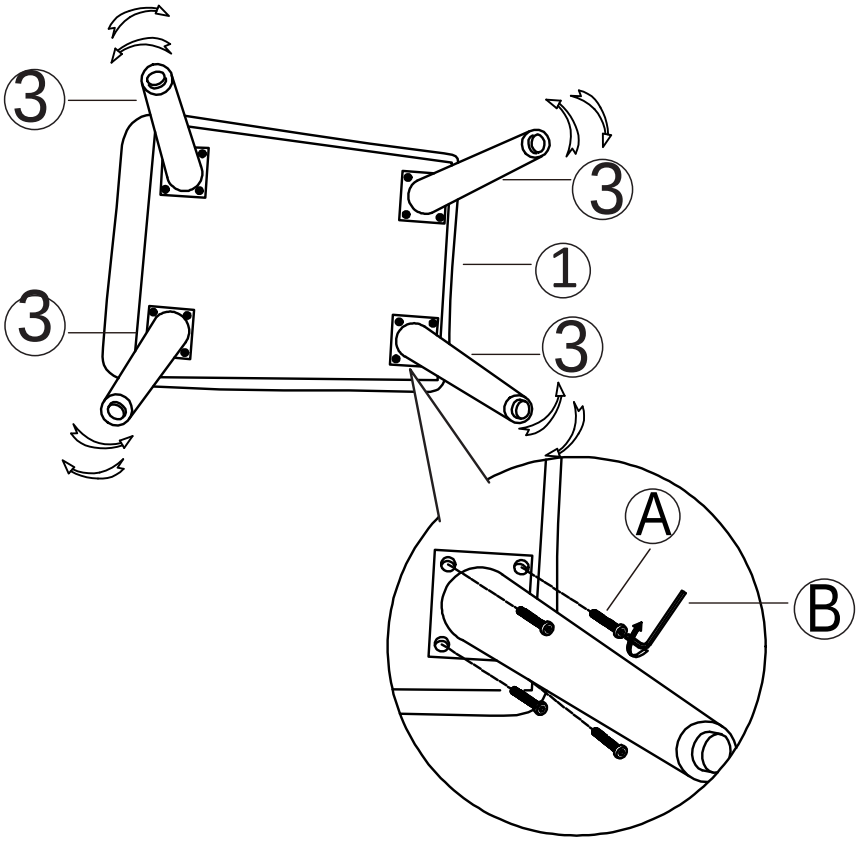

3

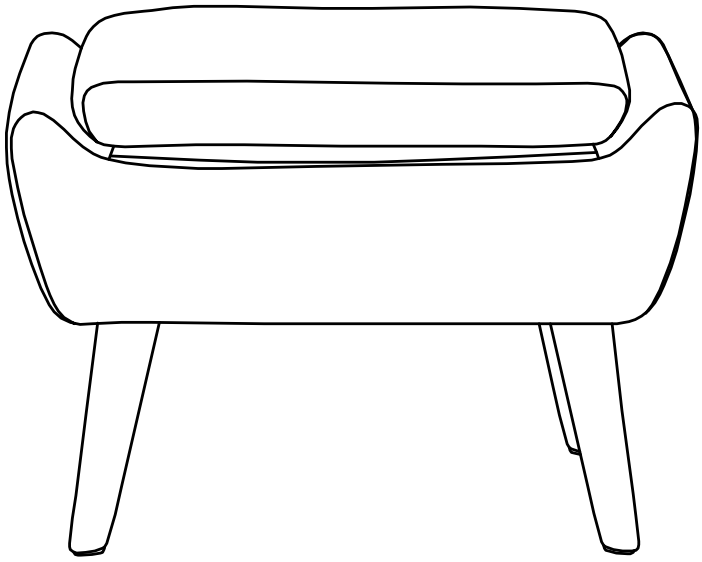

NEXT

WILSON STOOL

Assembly instructions

Actual product size
H44xW60 xD40CMCM

CAUTION: Maxium weight capacity of this chair is 110kg.

