SMART BIRD FEEDER WITH CAMERA

Please read the product manual carefully before use.

Product Information

The smart recording bird feeder features a highly sensitive PIR (passive infrared) sensor. When it detects movement from a person or animal—such as a bird—along with changes in ambient temperature, it is automatically triggered to capture images or record high-definition video.

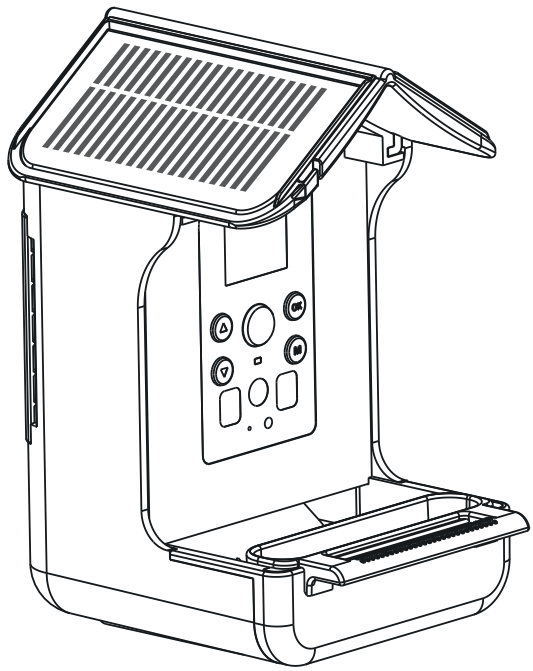

Package Contents

1. Smart bird feeder camera x1
2. Strap x1
3. USB Cable x1
4. Water sink x1
5. Handlebar mount adaptor x1
6. Handlebar mount x1
7. Hummingbird feeder x1
8. Instructions x1



1



2



3



4



5



6



7

Smart Bird Feeder Structure

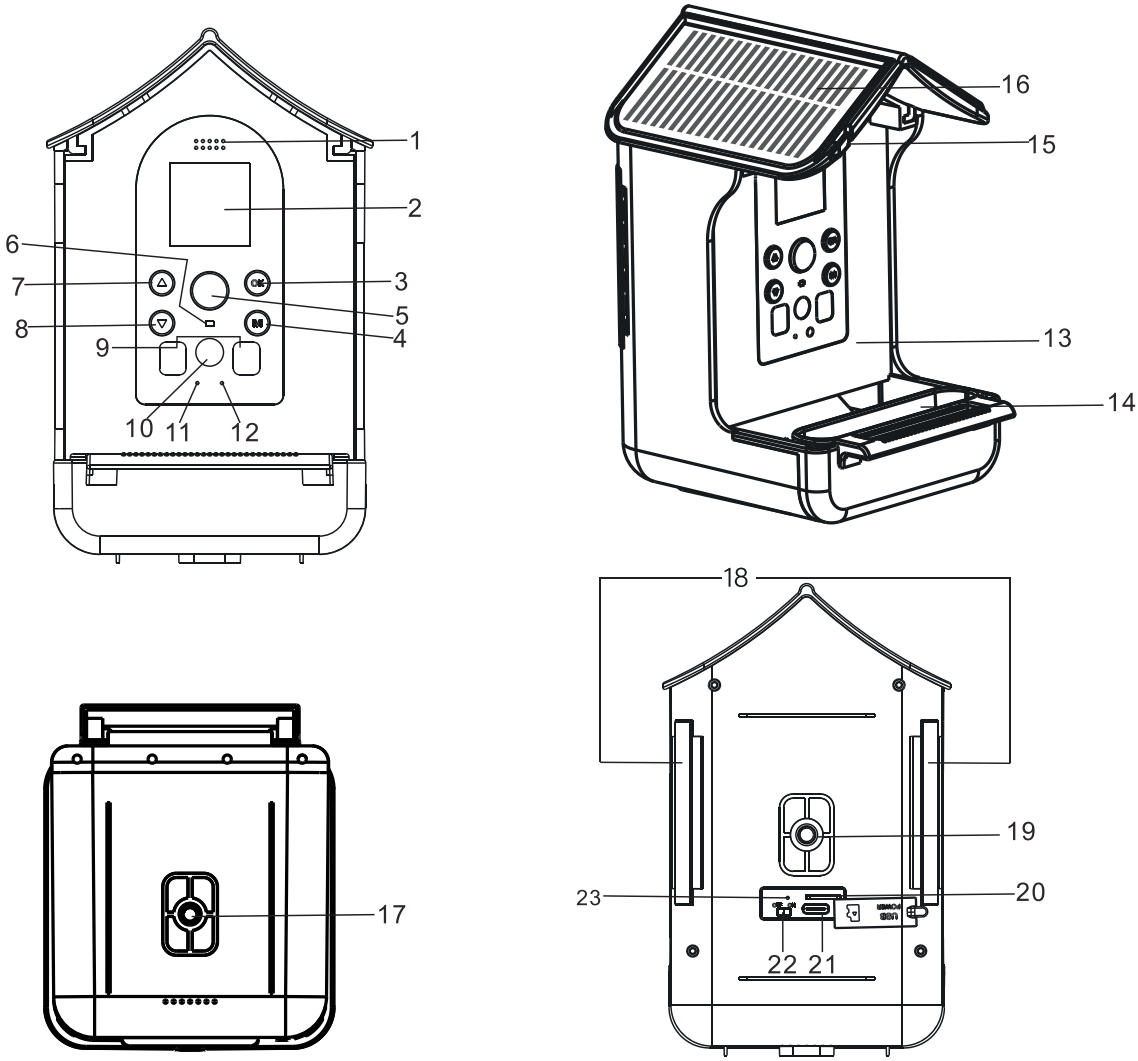

1. Speaker	13. Food Bin
2. Screen	14. Water Sink
3. OK/Capture	15. Hanging Hole
4. Mode	16. Solar Panels
5. PIR Sensing	17. Bracket Screw Hole
6. Status Light	18. Strap Place
7. UP	19. Bracket Screw Hole
8. Down	20. SD Card Slot
9. Infrared Lights	21. USB (Type-C)
10. Lens	22. Power Switch
11. Mic	23. Charging Indicator
12. Light Sensor	

Using the Smart Bird Feeder

Insert the SD Card

1. Open the silicone protective cover to access the memory card slot.
2. Insert the memory card (maximum capacity: 32GB), ensuring the metal contacts go in first.
3. Gently push the card down until you hear a click. The card fits only one way—do not force it if it doesn't insert smoothly.
4. Close the silicone protective cover securely.
5. To remove the memory card, press it inward and it will spring out automatically.

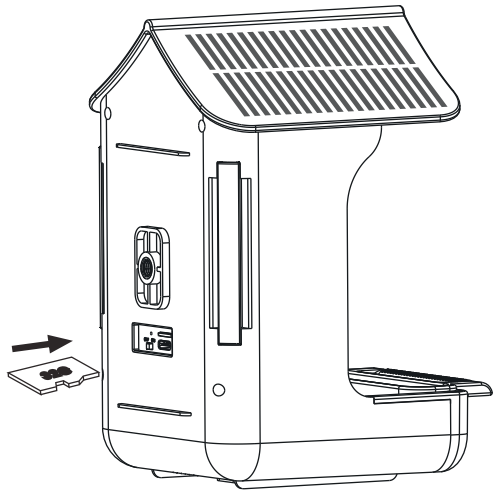

Note: the bird feeder only works properly when an SD card is inserted. Without the SD card, its related features won't function.

Power On/Off

Switch the ON/OFF control (No. 22 in the diagram) to ON to power up the feeder, then press the mode button to activate the screen. To turn the feeder off, simply switch the ON/OFF control back to OFF.

Operations

Cycle modes
Use the up/down buttons to switch between Photo, Video, Photo + Video, Playback, and Settings.

Enter a mode
Press the OK button to confirm your selection.

Exit a mode
Press the Mode button once to return to the previous menu and wake the screen.

Note: If the screen is off, press and hold any button for 2–3 seconds to turn it on.

Photo Mode

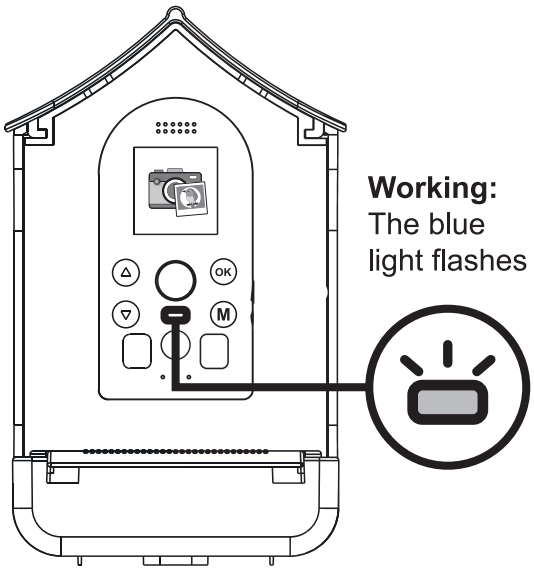

Select the photo function icon and press the OK button to enter Photo mode. The screen will then turn off automatically. When a bird or other object enters the PIR detection area, the indicator light will flash blue and the feeder will begin capturing images. The camera will automatically take 3, 5, or 10 photos without any manual input.

Video Mode

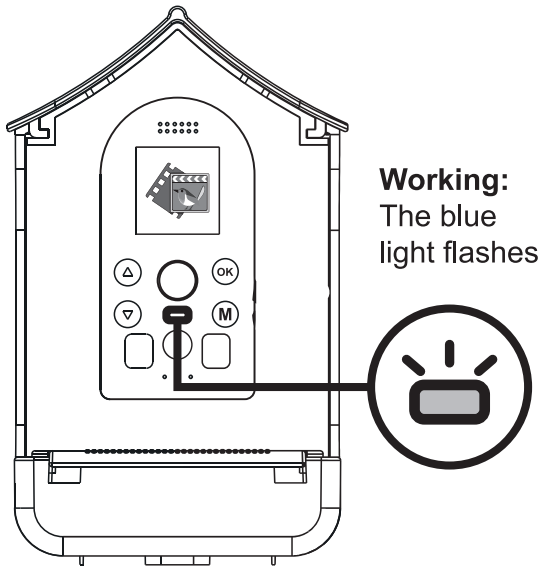

Select the video function icon and press the OK button to enter recording mode. The screen will then turn off automatically. When a bird or other object enters the PIR detection area, the indicator light will flash blue and recording will begin. The camera will automatically record for 10-sec / 30-sec / 1-min / 3-min without any manual input.

Photo & Video Mode

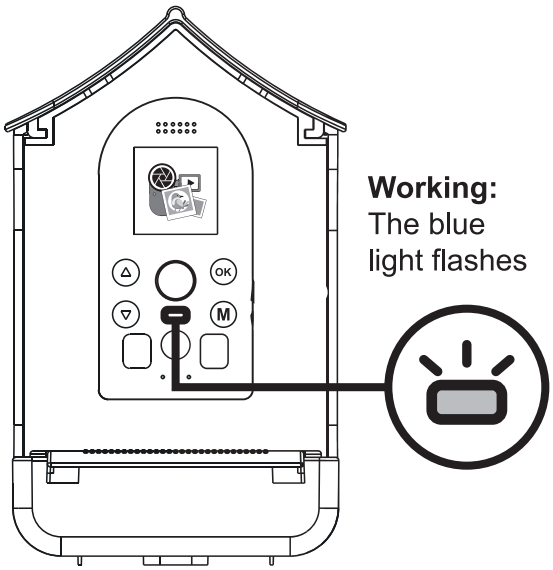

Select the Photo + Video function icon and press the OK button to enter this mode. The screen will then turn off automatically. When a bird or other object enters the PIR detection area, the indicator light will flash blue and the feeder will activate. It will first capture 3, 5, or 10 photos, then automatically record a 10-sec / 30-sec / 1-min / 3-min video—no manual operation required.

Note:

- In low-light or nighttime conditions, the camera's light sensor will automatically activate, and photos or videos will be recorded in black and white.
- To set the number of photos captured (3, 5, or 10), go to Settings > Burst.
- To adjust video duration (10 seconds, 1 minute, or 3 minutes), go to Settings > Video Length.

Playback

Use the up/down buttons to browse files.

Press the OK button to play or pause a video.

Press the Mode button to exit video playback.

Press and hold the up button to bring up the "Delete One" option.

Press and hold the down button to bring up the "Delete All" option.

Settings Menu

Format SD Card: Select this option and press OK to format the SD card, or press the Mode button to exit.

Version: View the product's software version.

Default Settings: Press OK to restore factory settings, or press the Mode button to exit.

Language: Choose from 12 available languages.

Video Length: Select 10s, 30s, 1 min, or 3 min. This setting applies in Video and Photo + Video modes.

Screen Standby: Set screen timeout to OFF, 1 min, 2 min, or 3 min.

Auto Power Off: Choose OFF, 3 min, or 5 min.

Burst: Select 3, 5, or 10 photos. This applies in Photo and Photo + Video modes.

Photo Resolution: Choose 3MP, 5MP, 8MP, or 12MP.

Video Resolution: Choose 1080P, 720P, or VGA.

Volume: Adjust the device volume in this option.

Date/Time: Use the up/down buttons to change the highlighted value. Press OK to move to the next field. Changes are saved after confirming all fields with the OK button.

How to Mount the Smart Bird Feeder

Using the strap

Installation method

Step 1: Thread the strap through the designated strap slots.

Step 2: Secure the feeder to a tree trunk or post using the strap.

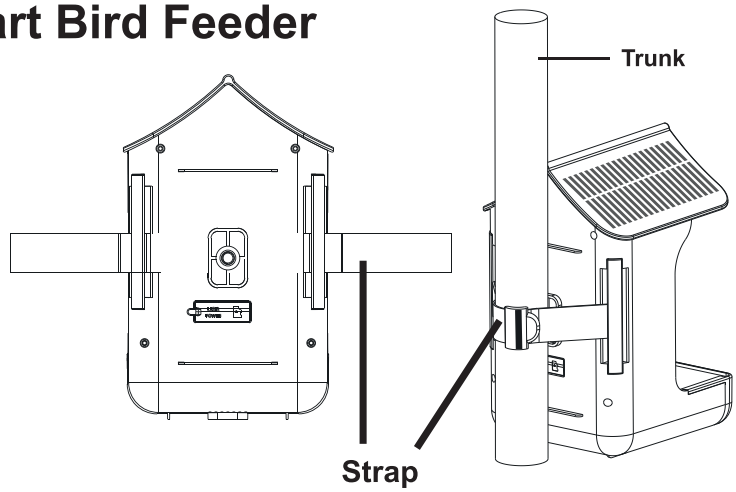

Using a Supporter

Installation method

Step 1: The feeder has tripod socket holes on the back and bottom. Choose the desired mounting orientation, attach the adapter to the supporter, and then connect it to the feeder.

Step 2: Secure the supporter to a tree trunk or pole.

Step 3: Attach the feeder firmly to the supporter.

Step 4: Fix the supporter to a small tree trunk for additional stability.

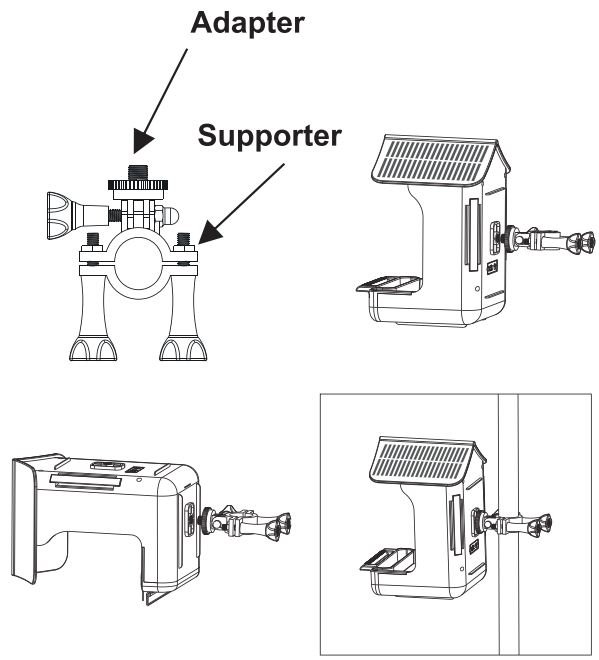

How to Add Food and Water

Adding Food

Step 1: Pull the top door on the roof from back to front to open the food compartment cover.

Step 2: Place the food into the food bin.

Step 3: Push the top door from front to back to close the food compartment cover.

Step 4: The sink installation section can be pulled out and extended if needed.

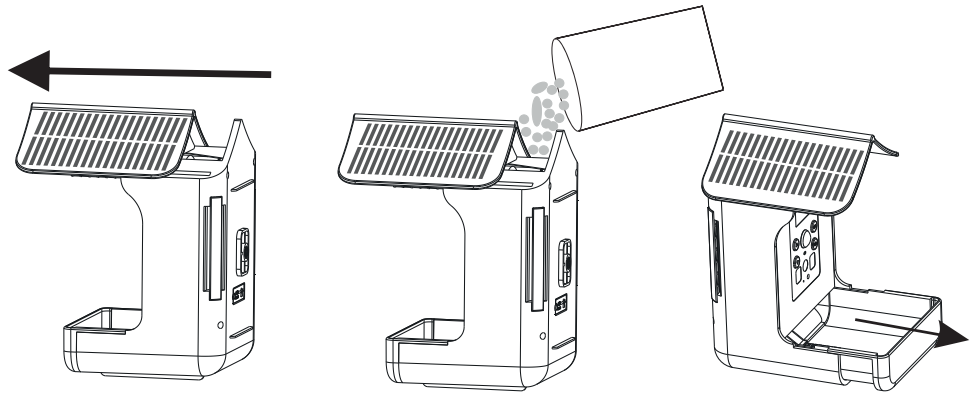

Adding Water

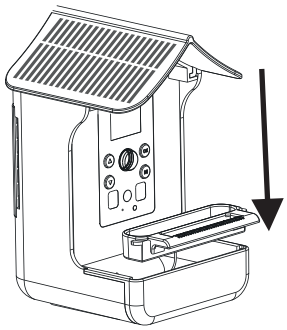

Step 1: Secure the sink by fastening its slot into the trough.

Step 2: Pour water into the sink.

Adding Hummingbird Nectar

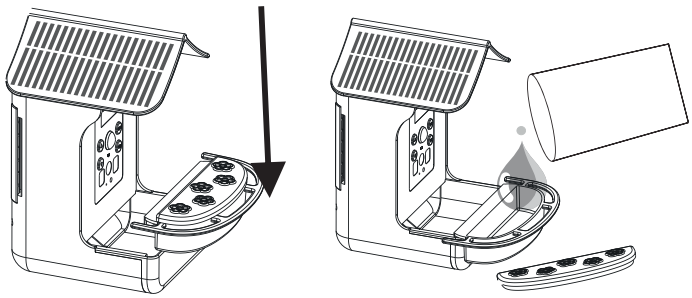

Step 1: Secure the hummingbird feeder by fastening its base into the trough.

Step 2: Remove the feeder cap, fill it with nectar, then replace and tighten the cap.

Hanging the Food

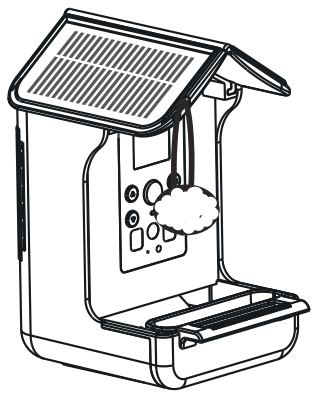

Tie the food with the rope, then attach the other end of the rope to the feeder's hanging hook.

Charging the Smart Bird Feeder

1. The feeder is equipped with a solar panel that provides continuous charging in sunlight.
2. If there is insufficient sunlight for an extended period and the solar panel cannot maintain the charge, remove the camera and charge it indoors.
3. Open the silicone protective cover on the charging port and connect the feeder using a USB cable.
4. Use a DC 5V 1A adapter for charging.

Connecting to a Computer (with SD Card Inserted)

1. Open the rubber cover on the back of the feeder to access the USB port.
2. Connect the feeder to your computer using a USB Type-C cable.
3. Once connected and powered on, the screen will display “Transfer Photos and Videos.”
4. Open the DCIM folder on your computer and copy the photos and videos.

COMS Sensor: GC1084
Screen: 1.44" IPS
Video Resolution: 1080P@30FPS,720P@30FPS(Real)
Photo Resolution: 12M/8M/5M/3M
Waterproof: Rainproof (IP55)
IR Light: 940nm Infrared light
PIR sensing distance: within 3 meters
PIR sensing trigger time: 0.8S
Microphone/Speaker: Yes
Battery: 3.7V 1200mAh (built-in)

Battery model: Lithium-ion Battery HB 503759
External Memory: Micro SD Card up to 32 GB
Charging Port: USB-C to USB-A
Solar Charging: Fully charges in ~8 hours under sunlight (38,000–40,000 lux)
Video recording: Estimated 6 hours
Lens angle: 110 degree
Working time: Date and Night
Size: Estimated 177.8x100.6x135.3mm
Weight: Estimated 319g

This product bears the selective sorting symbol for waste electrical and electronic equipment (WEEE). This means that this product must be handled pursuant to European Directive 2012/19/EU in order to be recycled or dismantled to minimize its impact on the environment. For further information, please contact your local or regional authorities. Electronic products not included in the selective sorting process are potentially dangerous for the environment and human health due to the presence of hazardous substances.







Manufactured & Imported by

The Source Wholesale
The Atrium, Curtis Road, Dorking, Surrey RH4 1XA

The Source Wholesale BV
Joop Geesinkweg 701,
1114 AB Amsterdam-Duivendrecht

Supplier item reference: BC01
customer.services@giftuniverse.com

MADE IN CHINA

130202 04/26

8*10cm

材质：80G 双胶纸

工艺：风琴折