MALVERN DOVE GREY / CHALK DOUBLE WARDROBE

521449/687299

Assembly instructions

Actual product size

H187.5 x W92 x D56cm

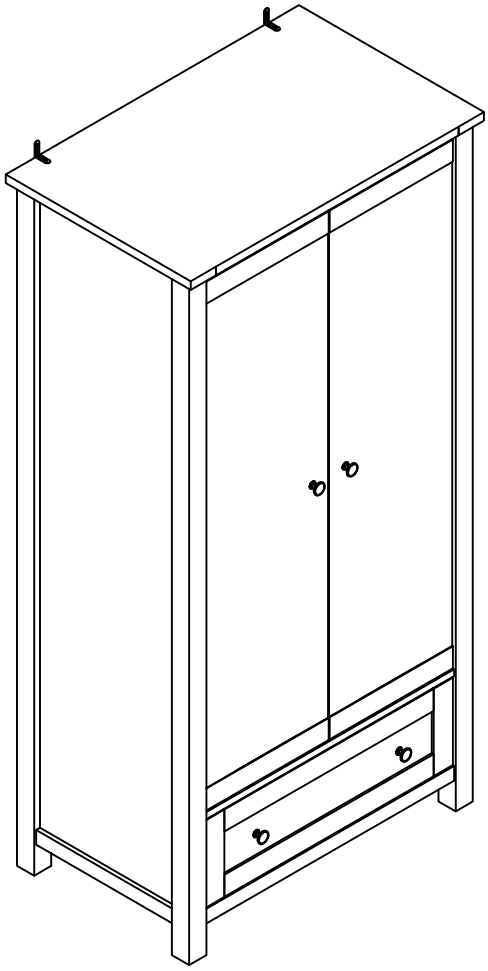

Need Help ?

With: Assembly instruction

Missing or damaged parts

IMPORTANT - RETAIN FOR FUTURE REFERENCE

CALL: 0333 777 8999

Produced in China for Next Retail Ltd.
521449/687299-2019-V1.

BEFORE YOU START

Number of people required to assemble

Two people are required to assemble this item

Time to assemble

30min

Tools required

not supplied

Do's

We suggest you spend a short time reading through this leaflet before you start.

When you are ready to start, make sure that you have the right tools and plenty of space.

Unwrap all packaging materials and place the components on a clean surface to protect it from damage,
We recommend that the packaging is used to protect the surfaces during assembly.

Carefully check that you have all the parts before beginning assembly.

Due to the size of this product we recomement that it is assembled in the room intended for use.

Ensure the product is fully assembled as illustrated and all fixings fully tightened before use.

Wipe occasionally with a soft cloth slightly dampened with water. Then buff with a dry clean soft cloth.

Wood will mellow and change colour over time, we recommend that ornaments and items placed on the surface are moved regularly for the first few months to prevent uneven mellowing.

Don'ts

Do not drag or pull your furniture.

Do not rub or scrub the surface when cleaning.

Do not use silicone based furniture polish. Silicone in furniture polishes can break down the finish.

Never allow any kind of liquid to remain on your furniture.
Absorption can cause wood to warp or finishes to de-laminate.

Do not place hot items (e.g. hot drinks) directly on to the wood surface. Please make sure you use a placemat or coaster.

GETTING TO KNOW YOUR PRODUCT

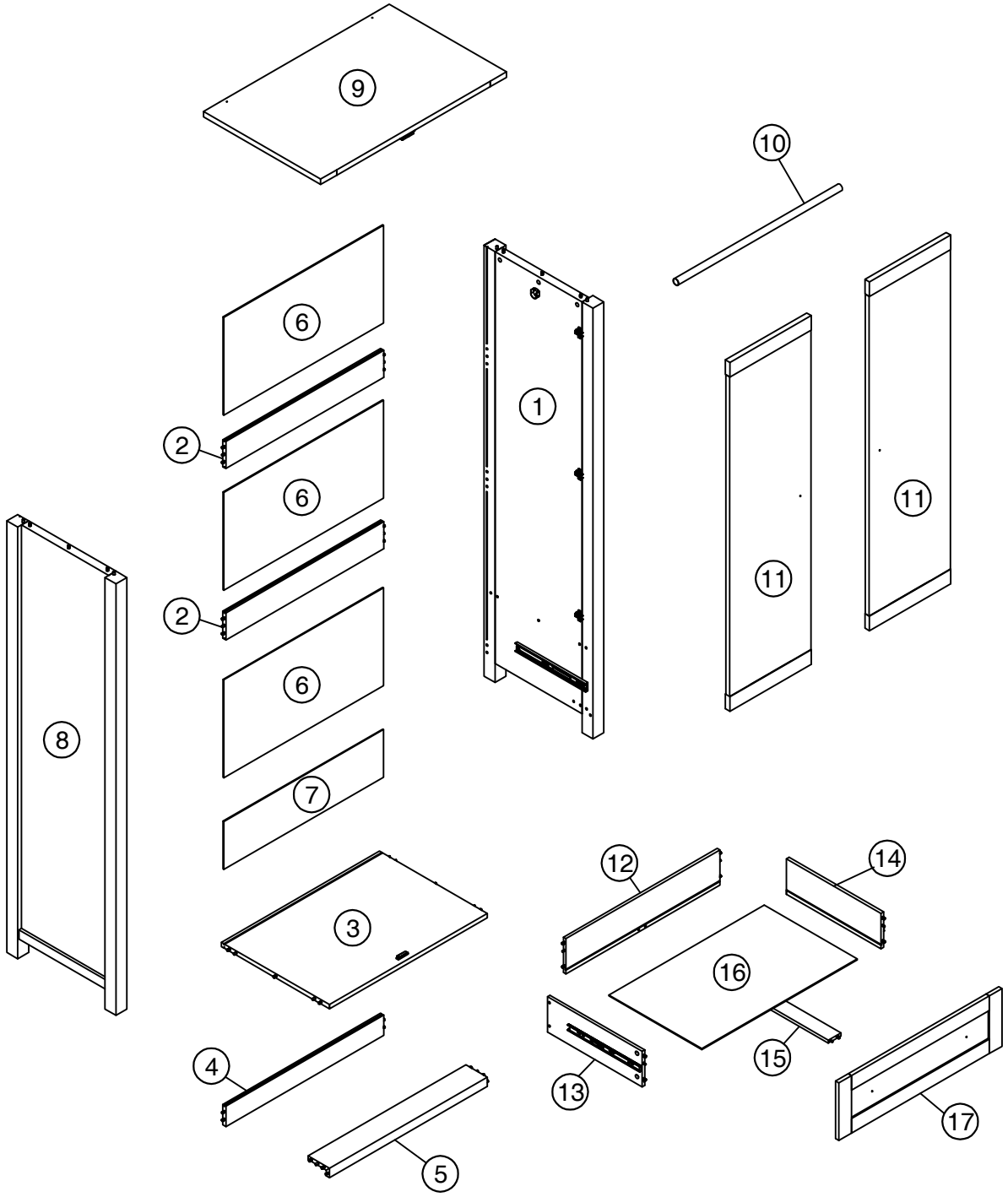

MALVERN DOVE GREY / CHALK DOUBLE WARDROBE

521449/687299

Assembly instructions

Components supplied. Please use this guide if you require replacement parts.

Ref	Dimensions	Visual	Qty	Ctn
1	54 x 185cm		1	2
2	11.5 x 78cm		**2**	3
3	53.5 x 78cm		1	3
4	9.5 x 78cm		1	3
5	11x 78cm		1	3
6	42 x 79cm		3	3
7	20 x 79cm		1	1
8	54 x 185cm		1	1
9	56 x 92cm		1	3

Ref	Dimensions	Visual	Qty	Ctn
10	2.5 x 77.5cm		1	3
11	38.5 x 143.5cm		1	1
11	38.5 x 143.5cm		1	2
12	14.5 x 73cm		**1**	3
13	14.5 x 45cm		1	3
14	14.5 x 45cm		1	3
15	6 x 43.5cm		1	3
16	44 x 74cm		1	3
17	23.5 x 77.5cm		1	3

MALVERN DOVE GREY / CHALK DOUBLE WARDROBE

521449/687299

Assembly instructions

Fixtures and fittings supplied (actual size)

Ref	Dimensions	Qty	Spare Qty
B2	Ø15 x 10mm	N/A	2
B3	Ø15 x 12mm	N/A	2
B8	Ø8 x 38mm	N/A	2
B3	Ø6 x 30mm	N/A	1
D6	Ø8 x 30mm	N/A	2
S41	Ø4 x 16mm	2	1
U139	Ø4.5 x 15mm	12	2
Z23	Ø4 x 25mm	2	N/A
Z5	Ø4 x 12mm	2	N/A

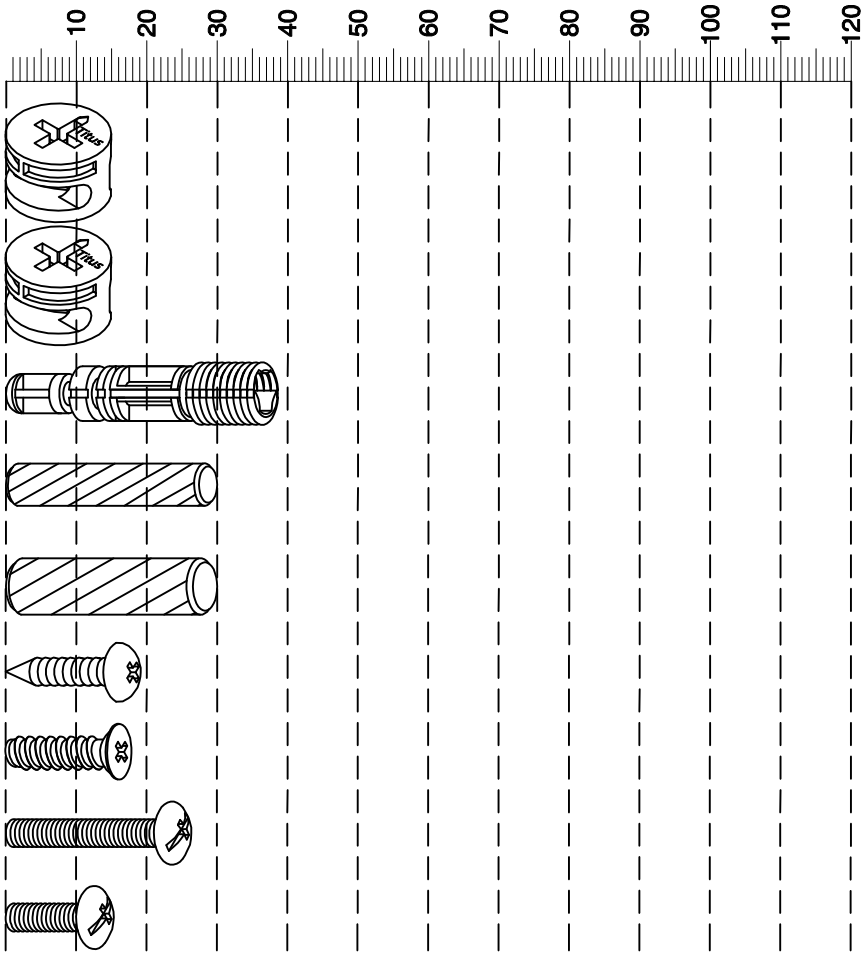

Fixtures and fittings supplied (not to scale)

Ref	Dimensions	Qty	Spare Qty	Visual
E29	N/A	4	N/A	
O1	Ø25mm	**10**	2	
N1	**N/A**	**2**	N/A	
C11	N/A	6	N/A	
T38	N/A	12	2	

MALVERN DOVE GREY / CHALK DOUBLE WARDROBE

521449/687299

Assembly instructions

1

DON'T STOP UNTIL THE 2 O'CLOCK LOCK

TURN THE CAM IN A CLOCKWISE DIRECTION UNTIL THE ARROW POINTS IN THE POSITIONS SHOWN IN THE DIAGRAMS BELOW

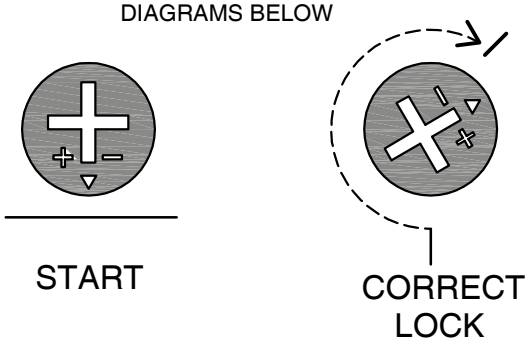

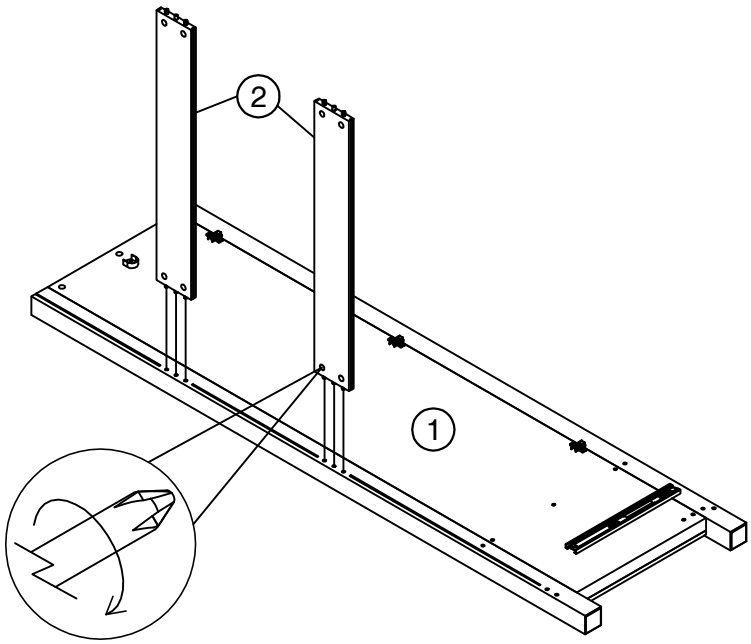

PUSH THE TWO PANELS TOGETHER ALLOWING THE DOWEL TO ALIGN WITH THE HOLE

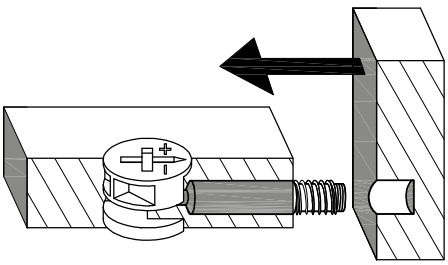

TURN THE CAM IN A CLOCKWISE DIRECTION

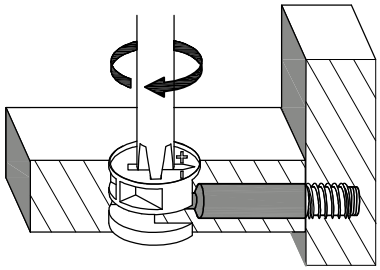

MALVERN DOVE GREY / CHALK DOUBLE WARDROBE

521449/687299

Assembly instructions

2

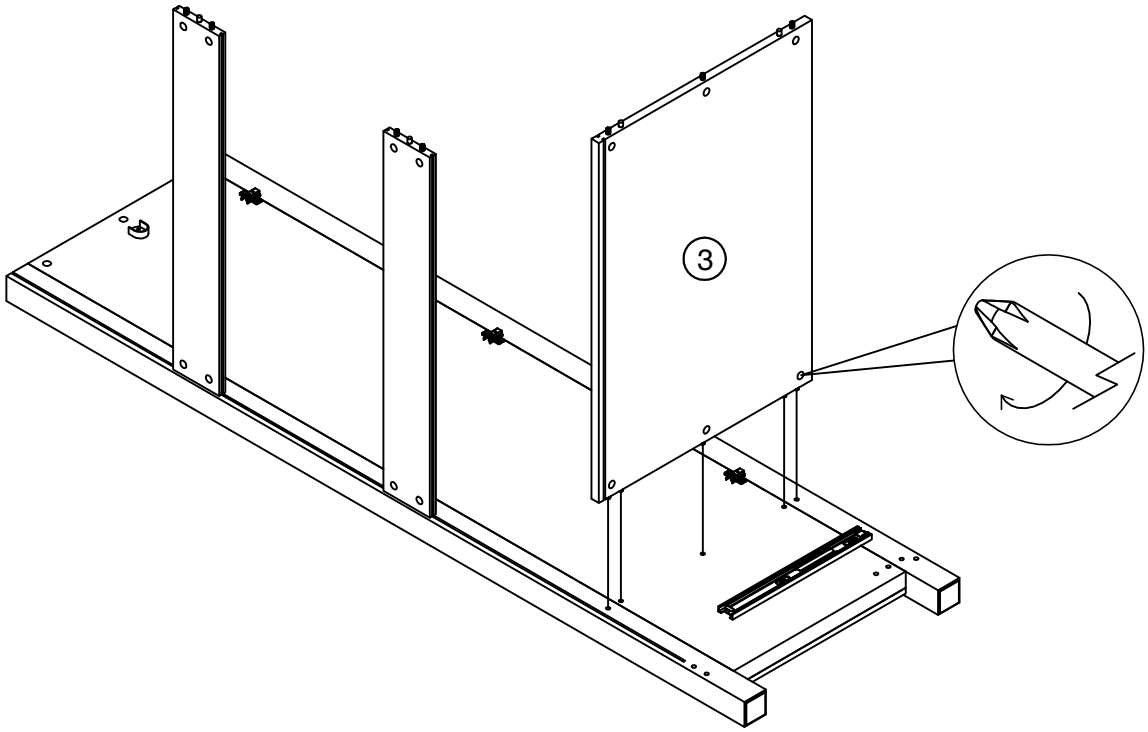

3

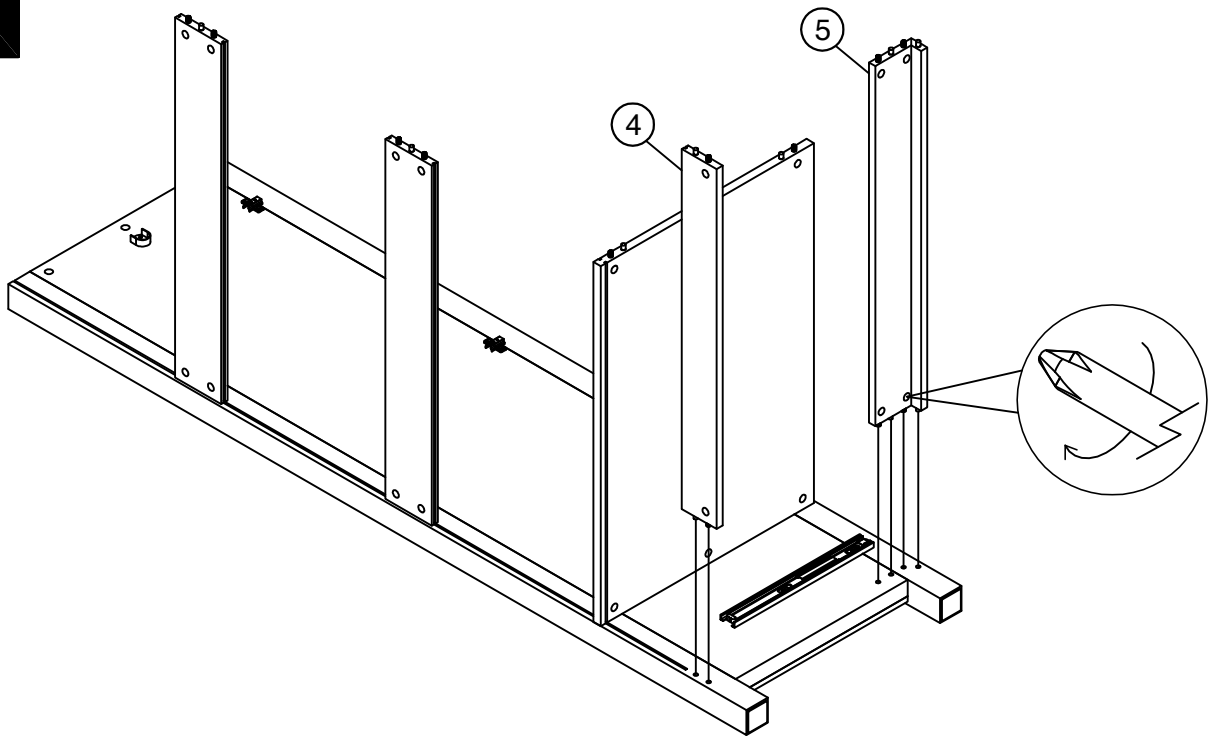

4

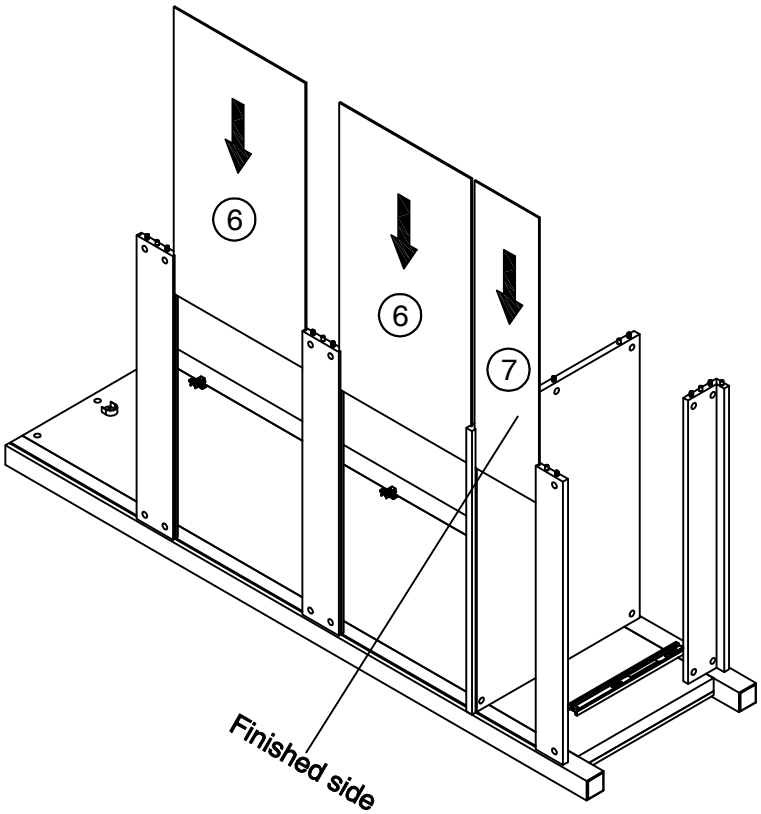

5

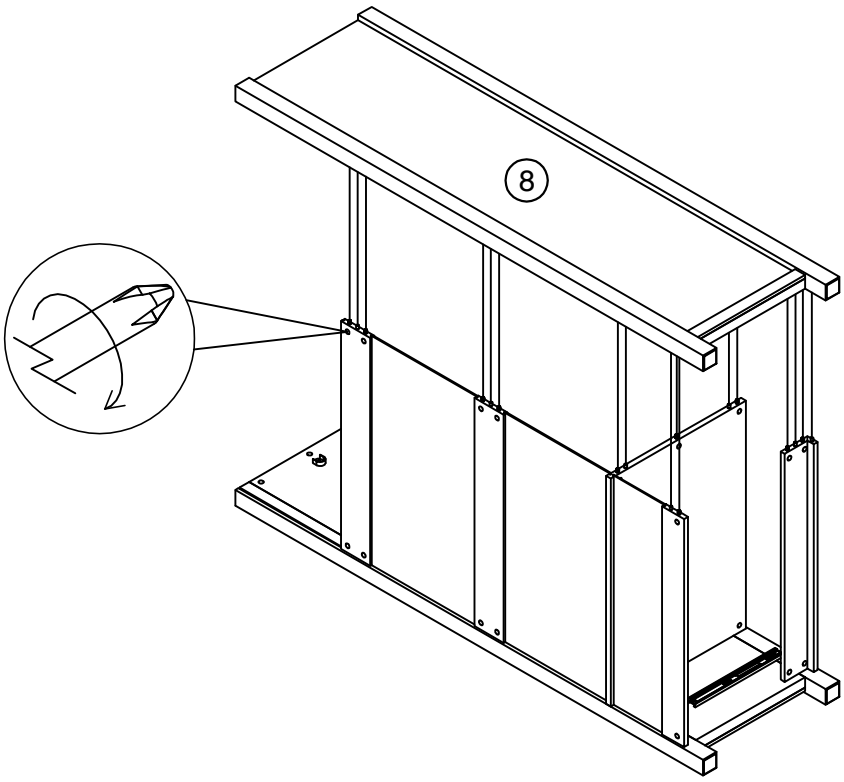

6

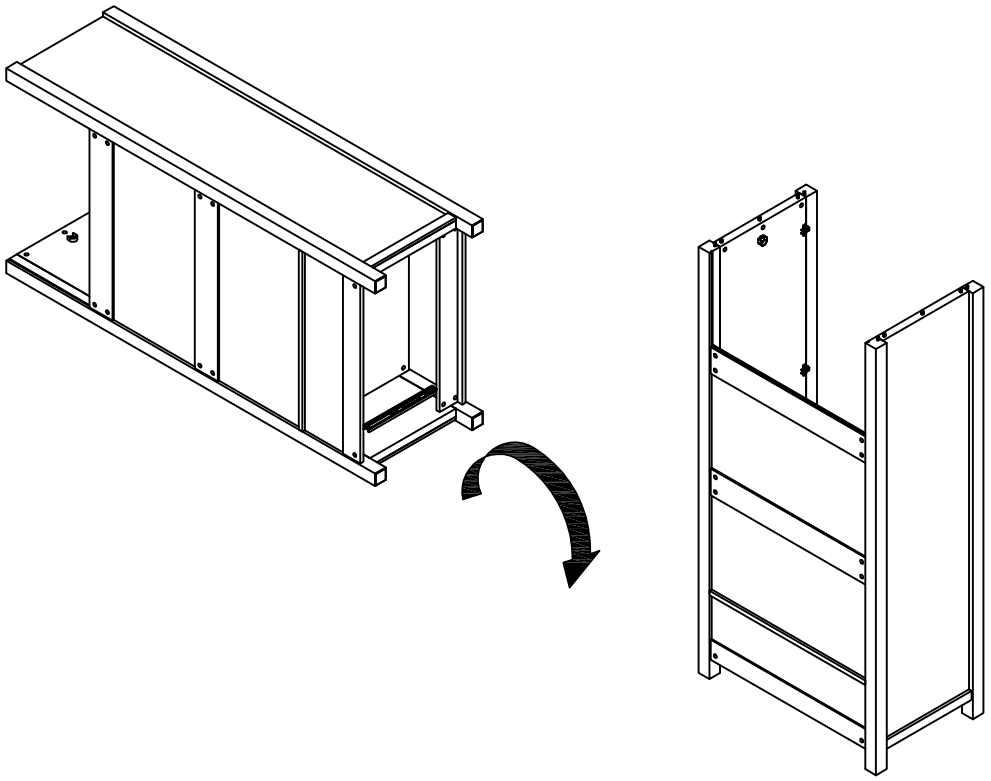

7

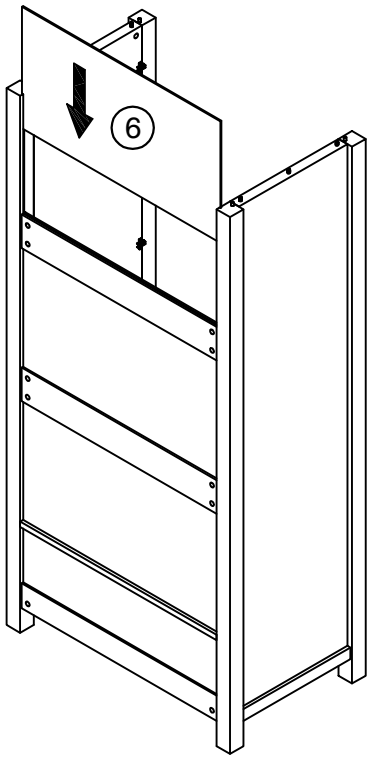

MALVERN DOVE GREY / CHALK DOUBLE WARDROBE

521449/687299

Assembly instructions

8

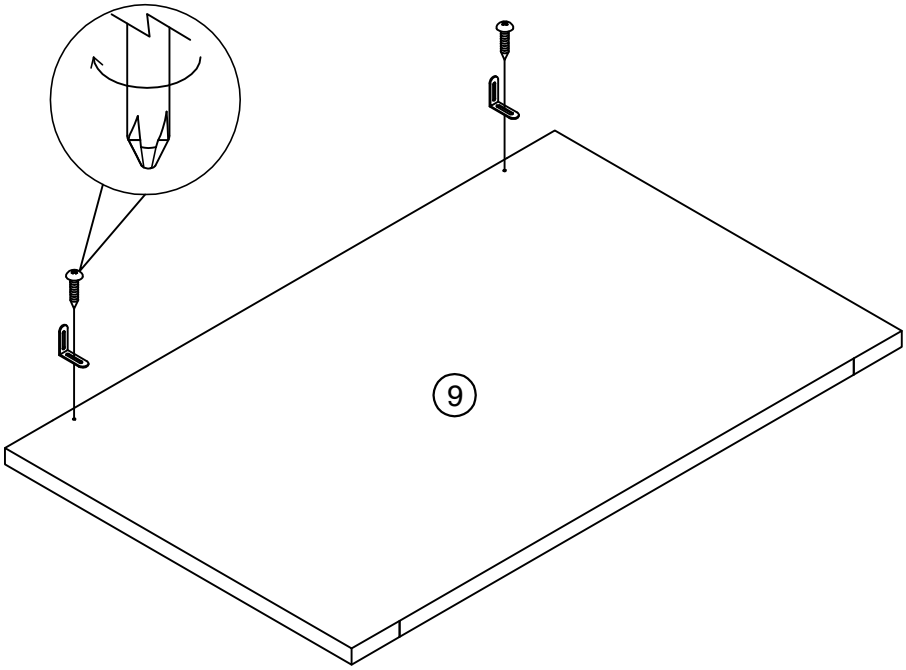

S41	Ø4 x 16mm	2	PH2 not supplied
N1	N/A	2	

9

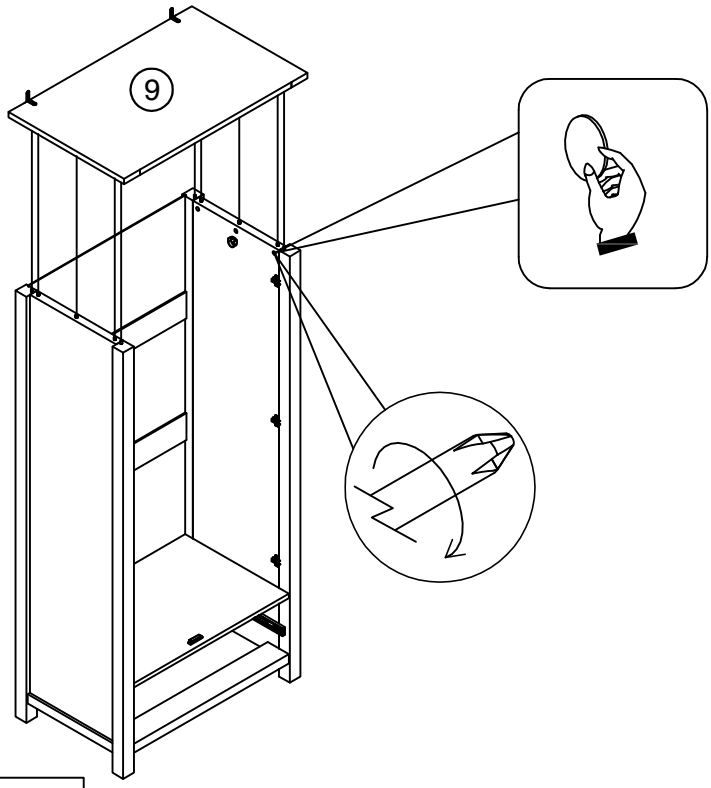

O1	Ø25mm	6	

MALVERN DOVE GREY / CHALK DOUBLE WARDROBE

521449/687299

Assembly instructions

10

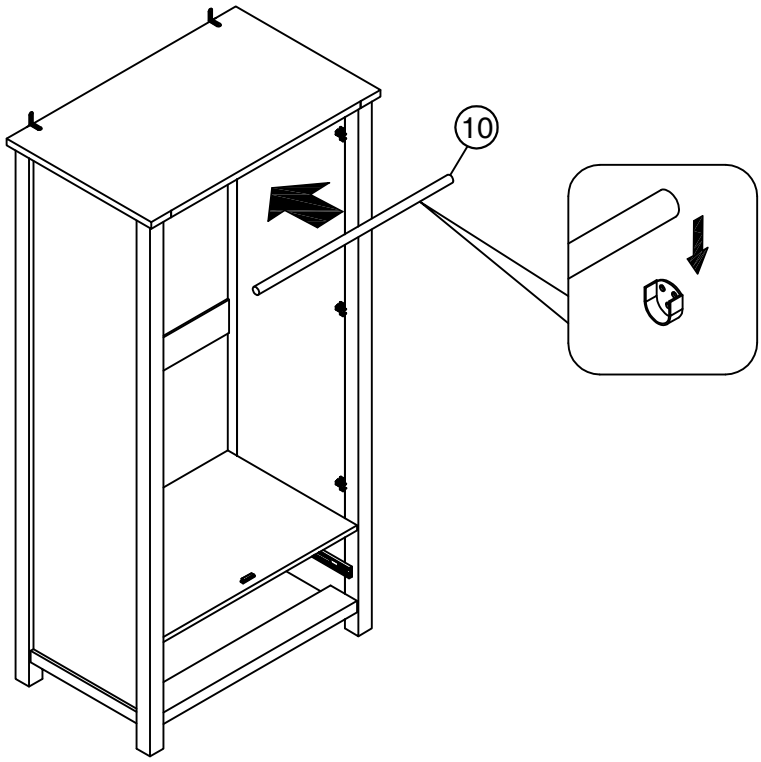

11

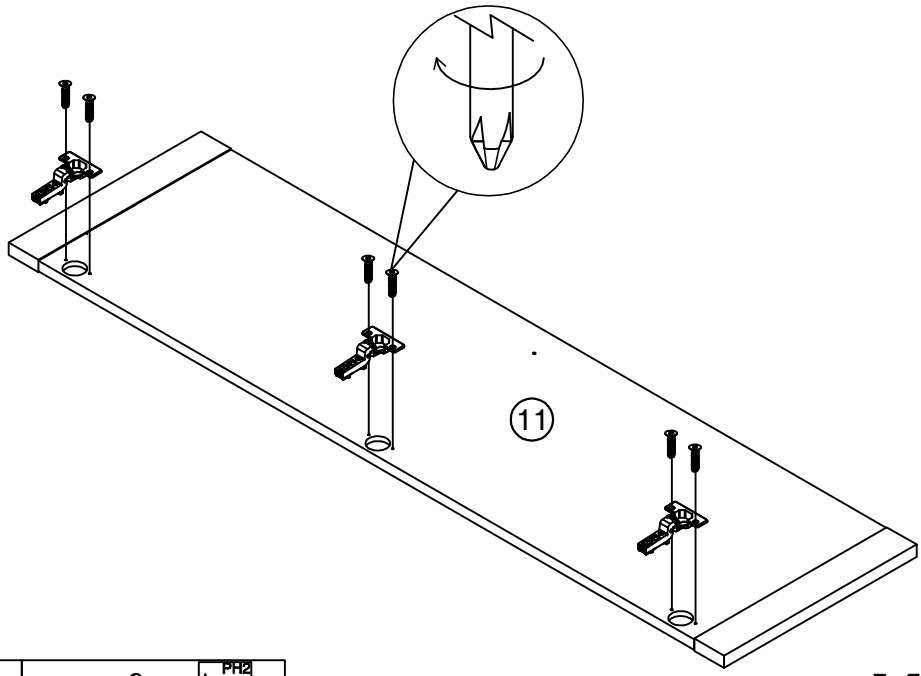

U139	Ø4.5 x 15mm	12	PH2 not supplied
C11	N/A	6	

x 2

12

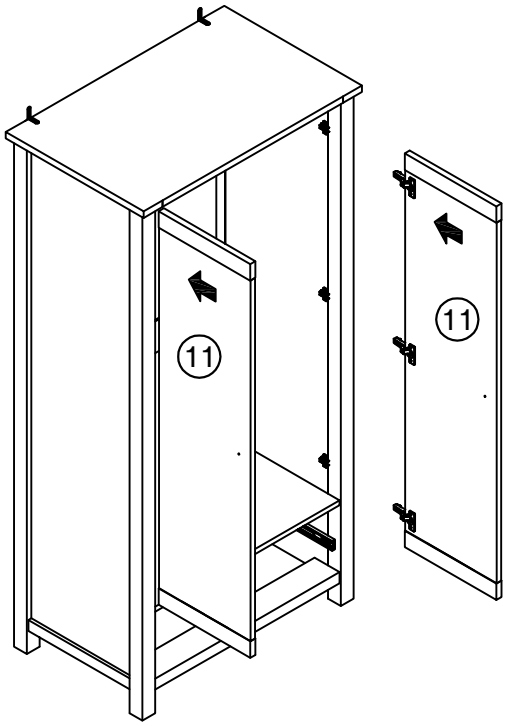

Install hinge

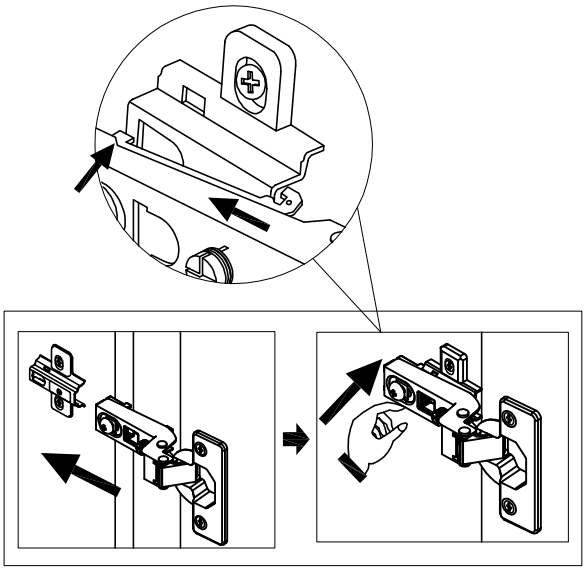

Remove hinge

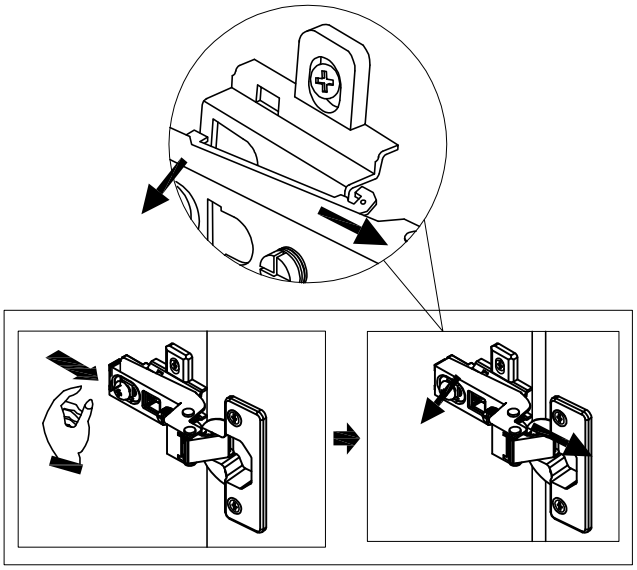

Adjust Hinge Position

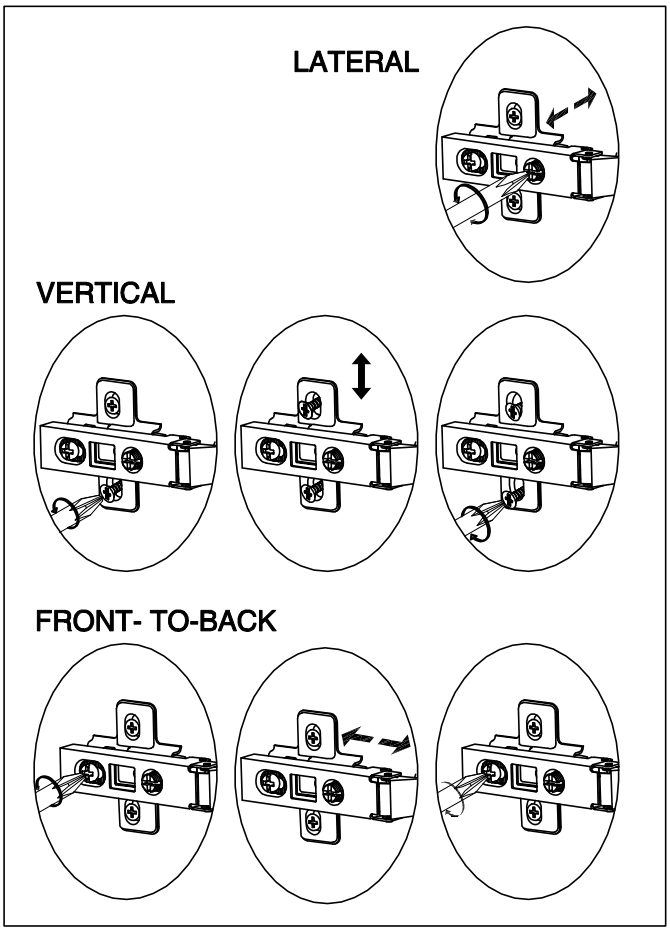

13

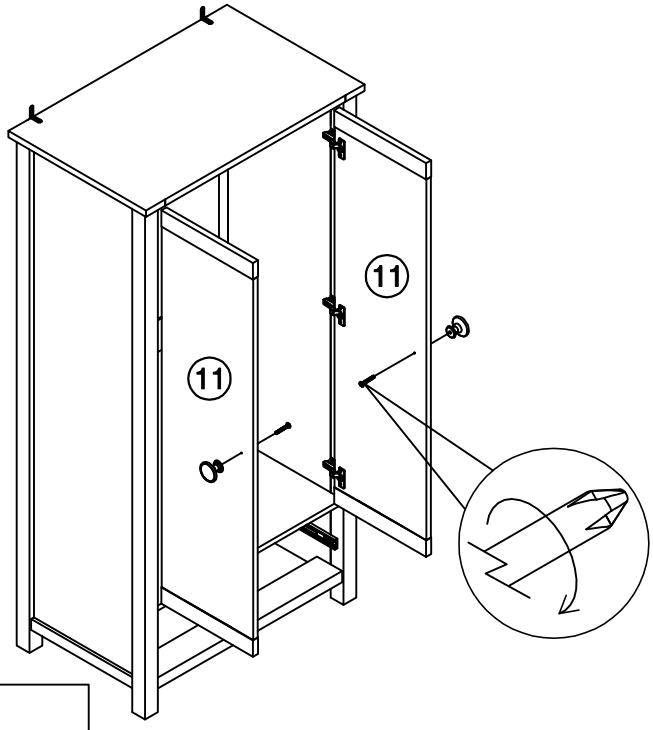

E29	N/A	2	
Z23	Ø4 x 25mm	2	PH2 not supplied

14

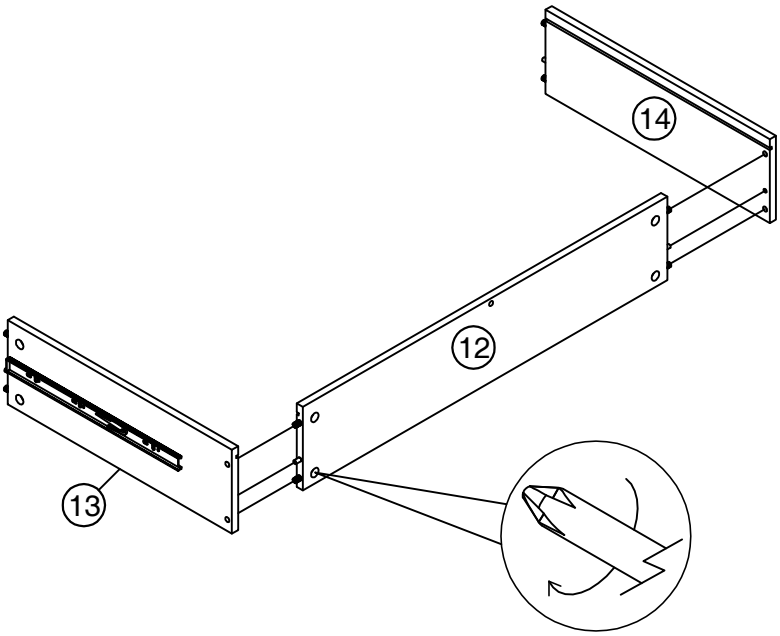

15

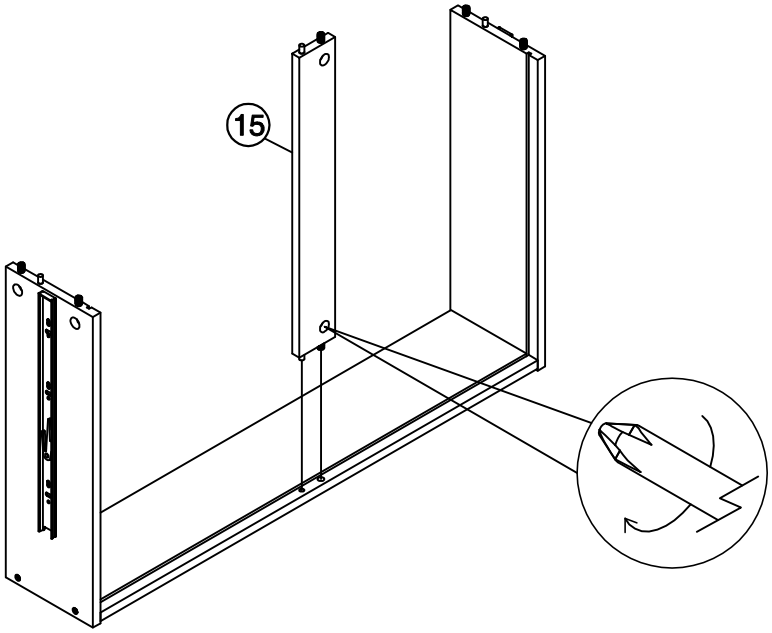

16

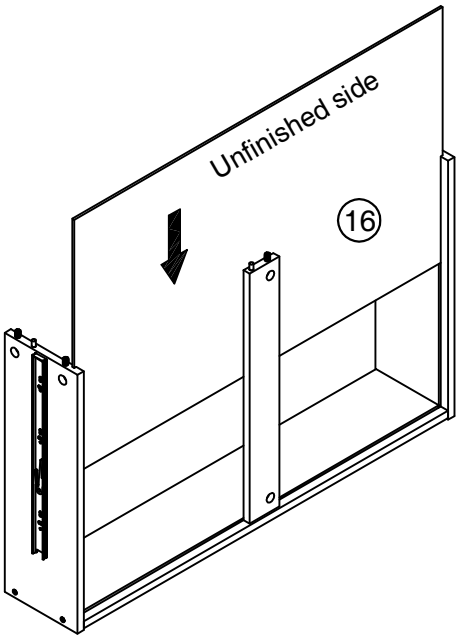

17

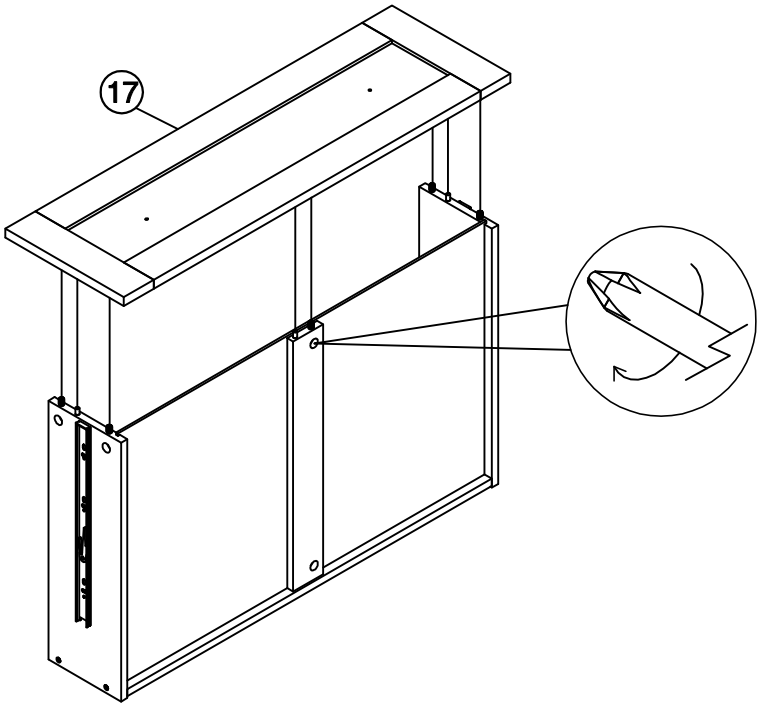

18

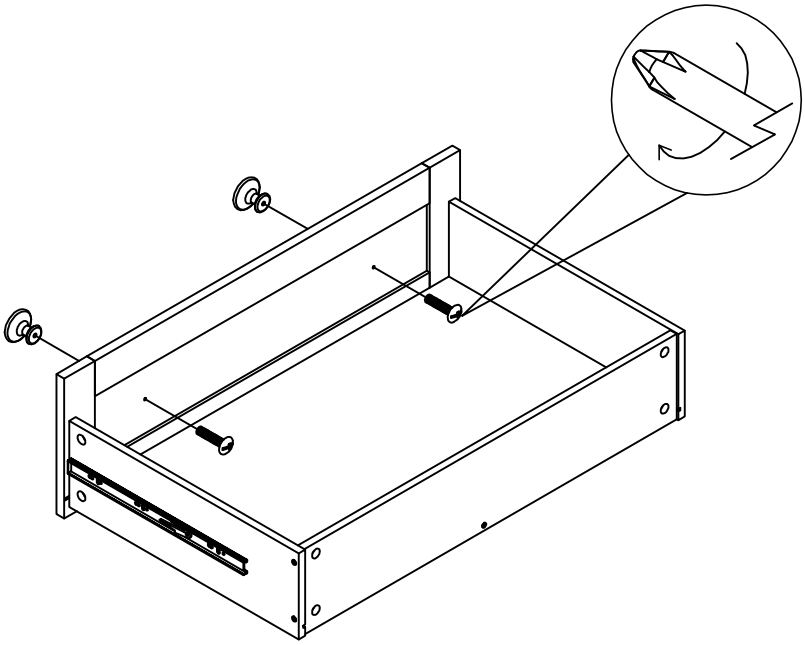

E29	N/A	2	
Z5	Ø4 x 12mm	2	PH2 not supplied

19

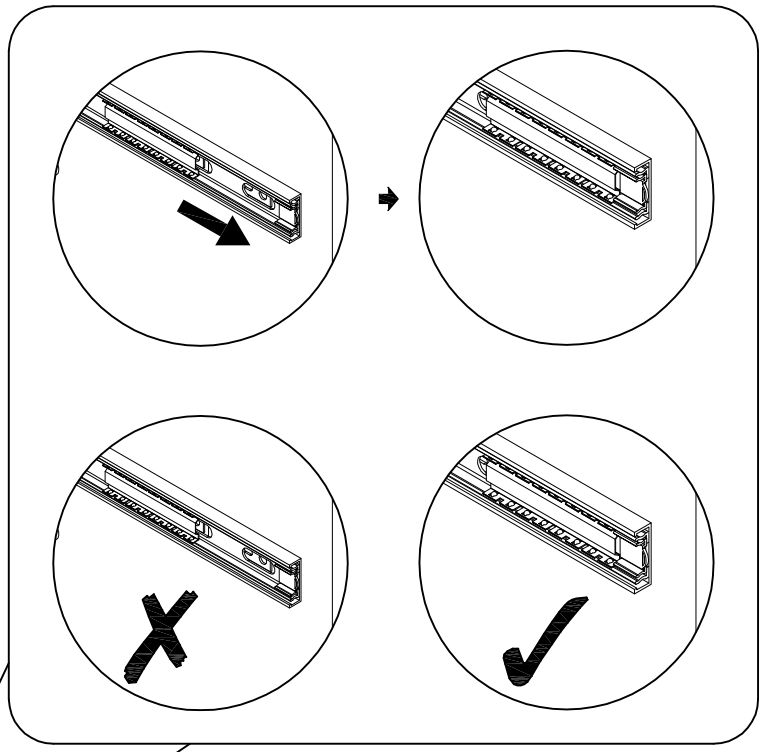

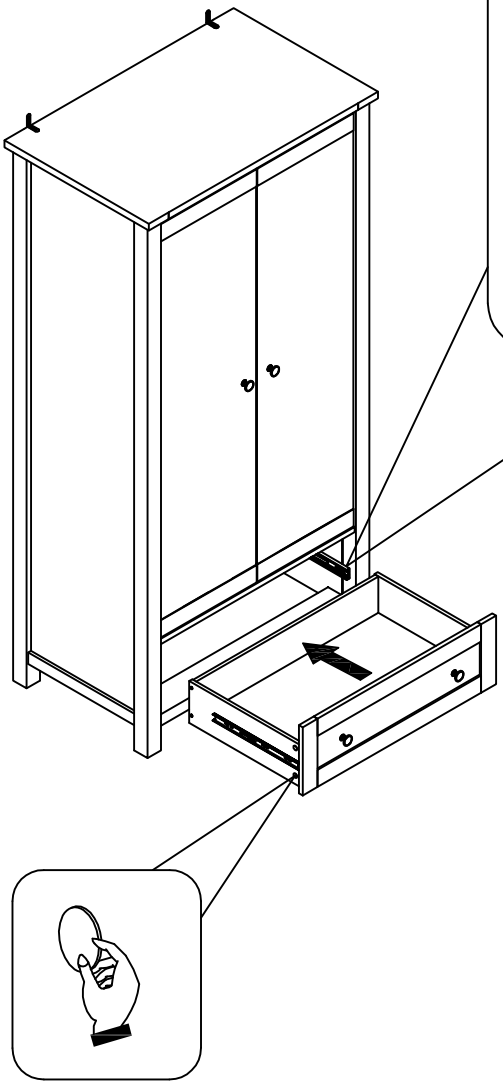

Left side

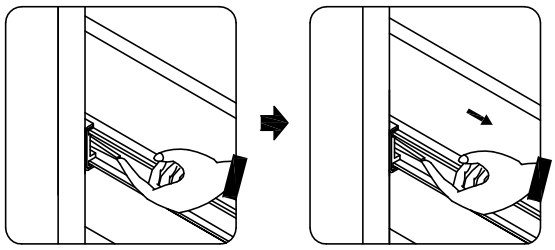

Right side

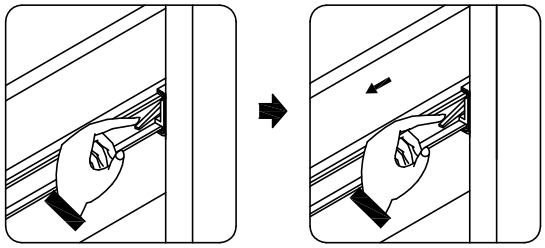

O1	Ø25mm	4	

20

We recommend the use of the wall attachment bracket/strap provided for safety reasons. Move unit into desired position.Secure the 2X"L" metal brackets to the wall with an appropriate screw and wall plug for your wall type (not provided).
Warning: Always ensure intended wall area to be drilled is free from hidden electrical wires, water and gas pipes.
NB:Wall fixings are not included-Please source suitable fixing for your wall type.
If in doubt please consult a qualified trades person.

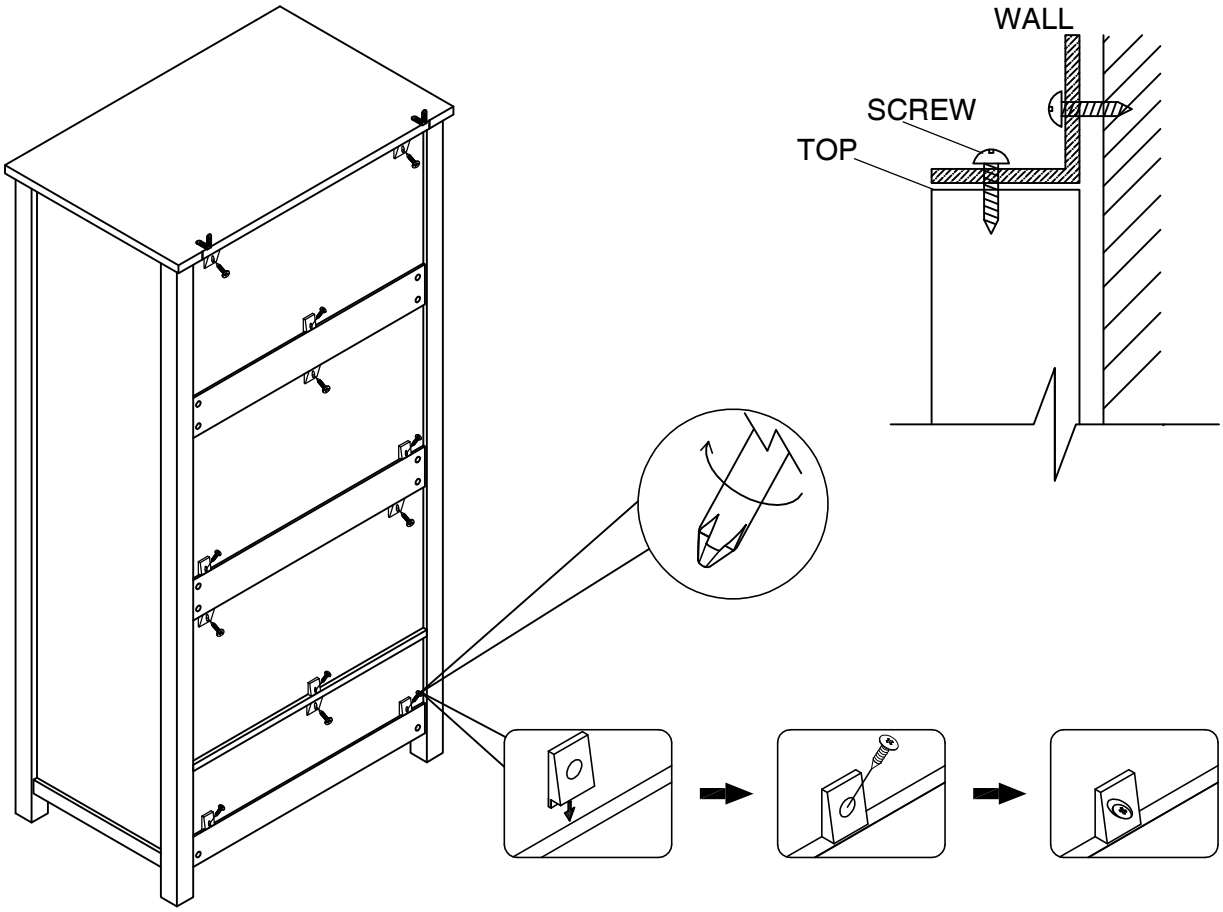

WHEN LOOSENING THE CAM

TURN THE CAM IN A COUNTERCLOCKWISE DIRECTION UNTIL THE ARROW POINTS IN THE POSITION SHOWN IN THE DIAGRAMS BELOW

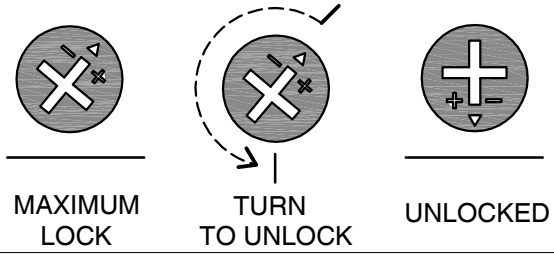

T38	N/A	12	PH2 not supplied

MALVERN DOVE GREY / CHALK DOUBLE WARDROBE
521449/687299

Actual product size
H187.5 x W92 x D56cm

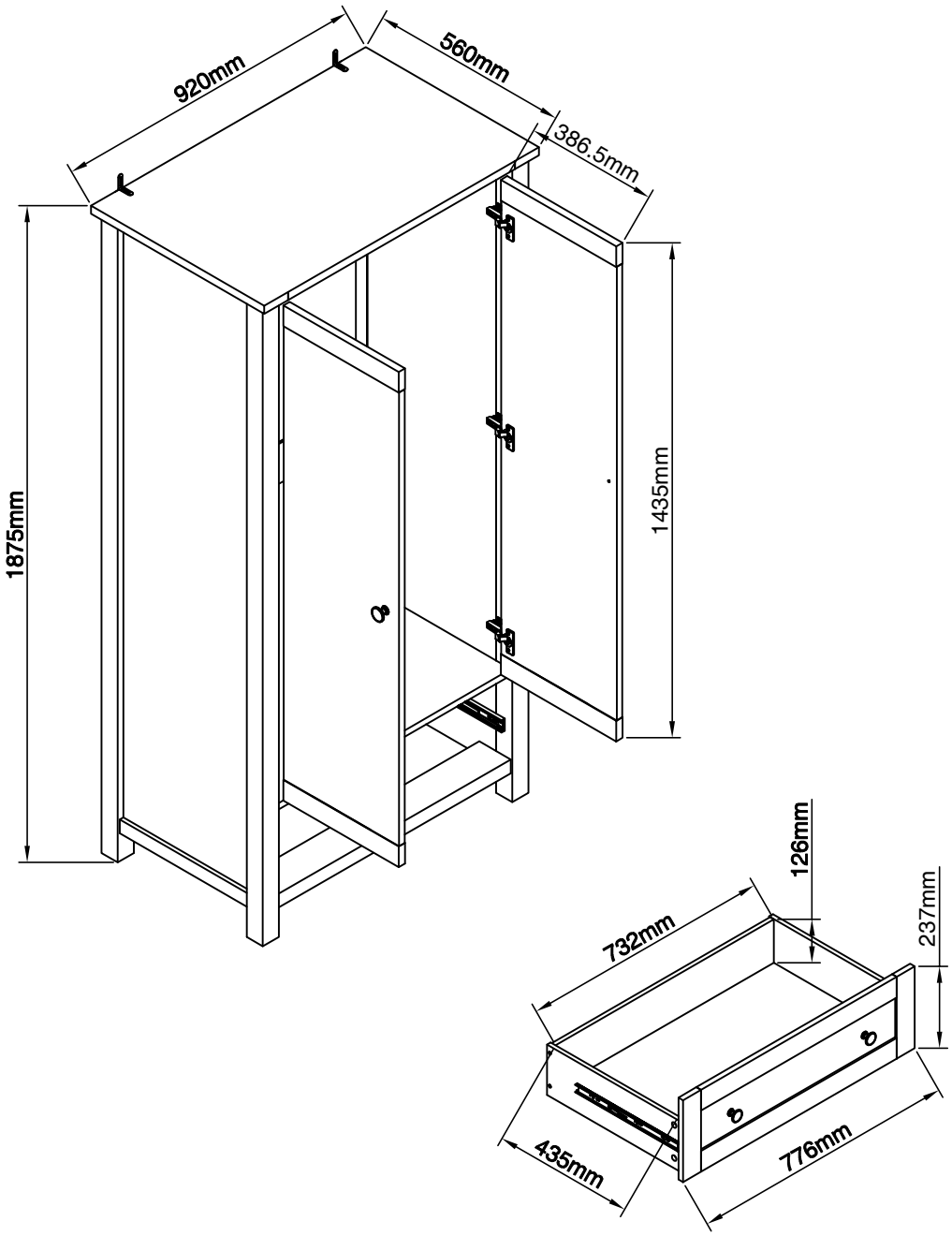

Produced in China for Next Retail Ltd.
521449/687299-2019-V1.

MALVERN DOVE GREY / CHALK DOUBLE WARDROBE
521449/687299

Warnings

We suggest you retain these instructions for future reference.

Keep fittings out of children's reach and keep children well away from construction area.

This product should only be used on firm level ground.

Please periodically check all fittings and re-tighten as necessary.

Please do not sit or stand on your furniture.

Avoid exposing the furniture to excessive heat or direct sunlight as this can cause deterioration of the colour.

Unwrap all packaging materials and place the components on top of the carton box or on a clean floor to protect it from damage

Missing parts

If you are missing any fixtures and fittings for your product. Please contact our customer service team on 0333 777 8999 and they will be happy to arrange for a replacement to be sent to you free of charge.

Home service technicians

If you have a fault with your product, please contact our customer service team on 0333 777 8999. If you have had the product for 28 days or less you may be offered a replacement,refund or for a fully trained home service technician to visit your home to assess the fault and repair the product where possible. If you have had the product for more than 28 days we will send an independant home service technician to review and repair the product where possible and recommend further action.

You can write to us at

Home Customer Services
Next Retail Ltd.
Desford Road,
Leicester,
LE19 4AT

To view our full furniture range please visit www.next.co.uk

Produced in China for Next Retail Ltd.
521449/687299-2019-V1.