furniturebox

BOBBY SOFA BED

ASSEMBLY GUIDE



SCAN ME

www.furniturebox.co.uk

Scan QR code for more tips,
advice and assembly video or visit
furniturebox.co.uk/club/bobby-sofabed

furniturebox

Important - Please read these instructions fully before starting assembly



SAFETY AND CARE ADVICE



NO POWER TOOLS

SAFETY AND CARE ADVICE

- Check you have all the components and tools listed.
- Remove all fittings from the plastic bags and separate them into their groups.
- We do not recommend the use of power drills/drivers for inserting screws, as this could damage the unit. Only use hand screwdrivers and Allen keys.
- Keep children and animals away from the work area, small parts could cause choking if swallowed.
- Make sure you have enough space to layout the parts before starting.
- Assemble the item as close to its final position (in the same room) as possible.
- Do not overtighten the nuts to avoid causing damage to the threads.
- Only clean using a damp cloth and mild detergent, do no use bleach or abrasive cleaners.
- From time to time check that there are no loose screws on this unit
- This product should not be discarded with household waste. Take to your local authority waste disposal centre

IMPORTANT INFORMATION

30 MINUTE BUILD

ONE PERSON

MAXIMUM CAPACITY
Single 150Kg,
Double 200Kg

PLEASE CHECK CAREFULLY AND MAKE SURE YOU HAVE ALL FITTINGS AND TOOLS LISTED BELOW BEFORE YOU START.

HARDWARE LIST:

A :  4 PCS B :  16 PCS C :  1 PC

NOTE: The quantities above are the correct amount to complete the assembly. In some cases more fittings may be supplied than are required.

furniturebox

STEP 1

Use a clean, flat, soft surface to avoid any bumps or scratches.

NOTE: We recommend you assemble your sofa bed as close to its final location as possible.

Place sofa face down and remove the 4x legs [A] from the compartment on the seat base.

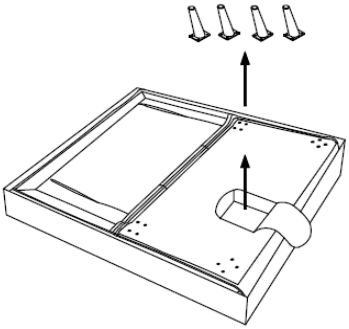

STEP 2

Attach the 4x legs [A]. Use 4x bolts [B] per leg. Tighten with Allen key [C].

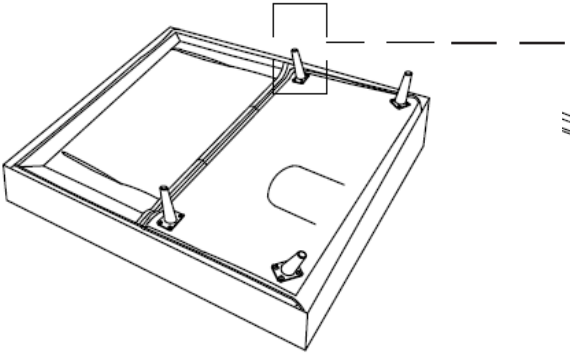

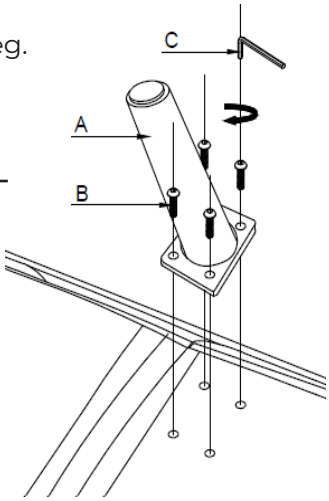

STEP 3

The assembly is now complete. See following pages for instructions on how to fold into sofa / bed.



Sofa Assembly

1.

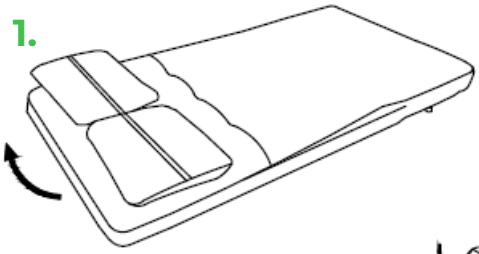

2.

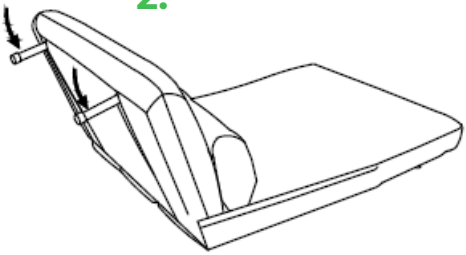

3.



4.

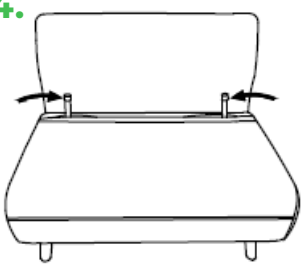

5.



furniturebox

Bed Assembly

1.



2.

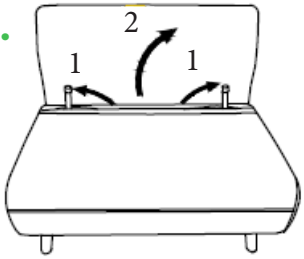

3.

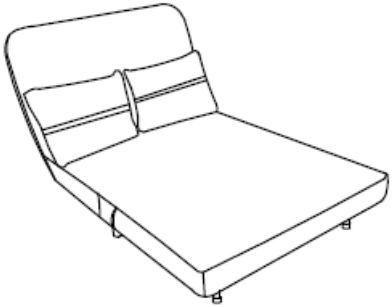

4.

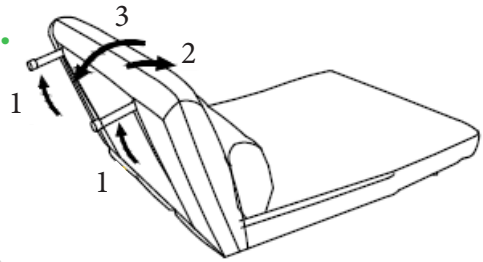

5.

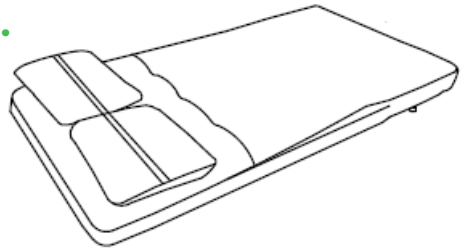

LOOKING GOOD!

Now you've assembled your product find out how to care for your item and keep it looking brand new.



Look for your care guide in the box or visit:

www.furniturebox.co.uk/club/care-guide



OUR 2 YEAR* GUARANTEE

our products come with a 2 year guarantee to give you peace of mind shopping at Furniturebox

*excludes some garden furniture items which have a 1 year guarantee

WHAT THE GUARANTEE COVERS

PRE-INSERTED FIXINGS
e.g. lose metal threads

FAULTY JOINTS
e.g. legs bending

EXTERNAL FIXING FAULTS
e.g. bonding/glue

STRUCTURAL INTEGRITY
e.g. the frame of the product



ACTIVATE YOUR GUARANTEE ONLINE

scan this QR code with your phone to read the full guarantee online and register your product. It only takes a moment to fill out. Or visit: furniturebox.co.uk/our-guarantee

Furniturebox UK, Unit 6, St Modwen's Park, Chippenham, SN15 5BD
Tel: 01747 863333 Email: sales@furniturebox.co.uk