NEXT

BOURTON WHITE LARGE SIDEBOARD-835778

Assembly instruction

Actual product size
H71.1XW140XD40.5CM

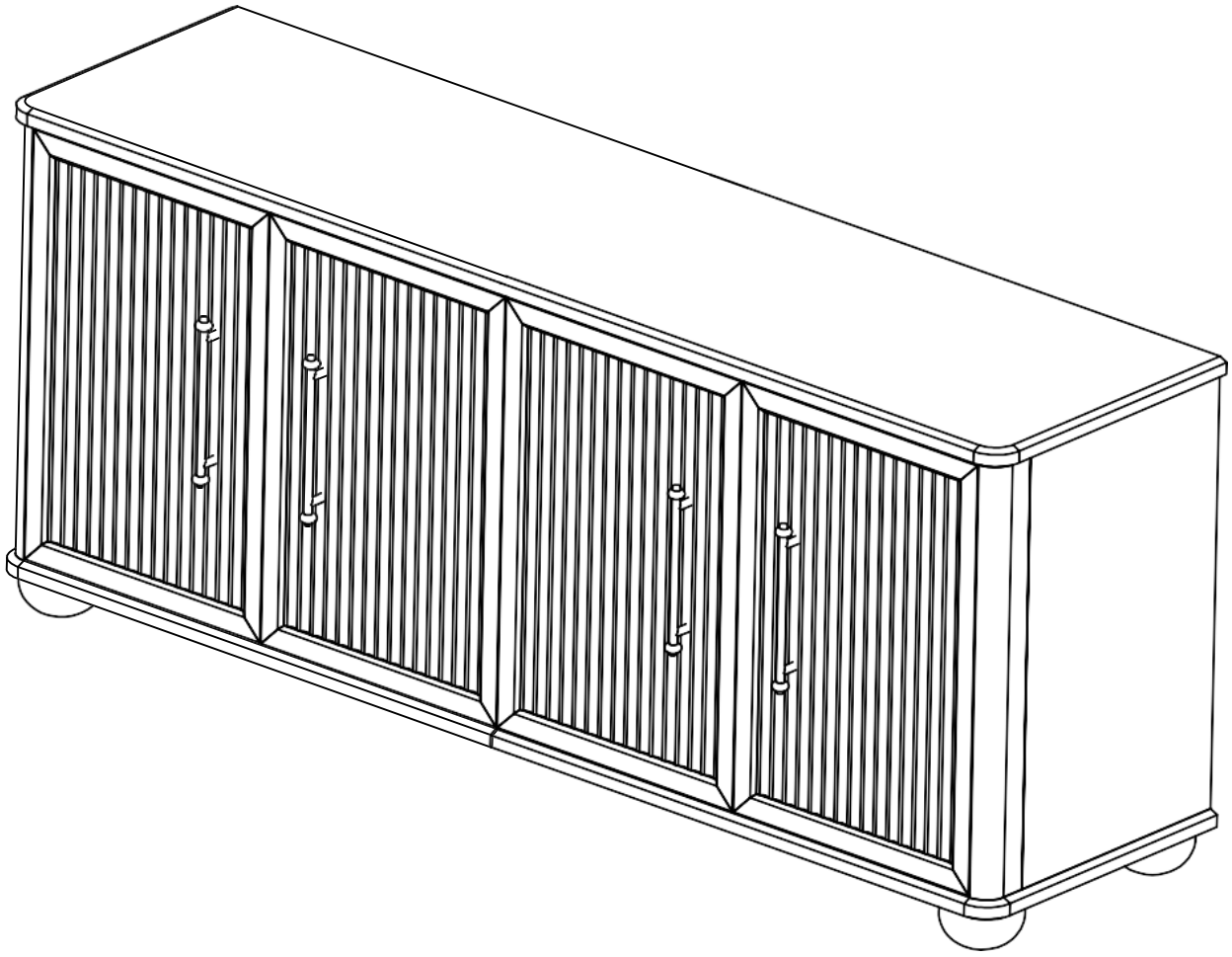

Need Help?

With assembly instruction
Missing or damaged parts
CALL: 03337778999

IMPORTANT – RETAIN FOR FUTURE REFERENCE

Produced in India for next retail ltd. 835778- 2026

BEFORE YOU START

Number of people required to assemble
Two people are required to assemble this item.
Time to assemble: 30 minutes

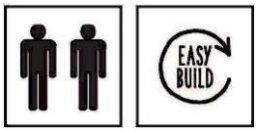

BOURTON WHITE LARGE SIDEBOARD-835778

Assembly instruction

Do's

We suggest you spend a short time reading through this leaflet before you start. When you are ready to start, make sure that you have the right tools and plenty of space. Unwrap all packaging materials and place the components on a clean surface to protect it from damage, we recommend that the packaging is used to protect the surfaces during assembly. Carefully check that you have all the parts before beginning assembly. Due to the size of this product we recommence that it is assembled in the room intended for use. Ensure the product is fully assembled as illustrated and all fixings fully tightened before use. Wipe occasionally with a soft cloth slightly dampened with water. Then buff with a dry clean soft cloth. Wood will mellow and change colour over time, we recommend that ornaments and items placed on the surface are moved regularly for the first few months to prevent uneven mellowing.

Dont's

Do not drag or pull your furniture. Do not rub or scrub the surface when cleaning. Do not use silicone based furniture polish. Silicone in furniture polishes can break own the finish. Never allow any kind of liquid to remain on your furniture. Absorption can cause wood to warp or finishes to de-laminate. Do not place hot items (e.g. hot drinks) directly on to the wood surface. Please make sure you use a placemat or coaster.

Missing parts

If you are missing any fixtures and fittings for your product. Please contact our customer service team on 0333 777 8999 and they will be happy to arrange for a replacement to be sent to you free of charge.

Warnings

We suggest you retain these instructions for future reference. Keep fittings out of children s reach and keep children well away from construction area. This product should only be used on firm level ground. Please periodically check all fittings and re-tighten as necessary. Please do not sit or stand on your furniture. Avoid exposing the furniture to excessive heat or direct sunlight as this can cause deterioration of the colour. Unwrap all packaging materials and place the components on top of the carton box or on a clean floor to protect it from damage.

Home Service Technicians

If you have a fault with your product, please contact our customer service team on 0333 777 8999. If you have had the product for 28 days or less you may be offered a replacement, refund or for a fully trained home service technician to visit your home to assess the fault and repair the product where possible. If you have had the product for more than 28 days we will send an independent home service technician to review and repair the product where possible and recommend further action.

You can write to us at
Home Customer Services Next Retail Ltd.
Desford Road,
Leicester, LE19 4AT

To view our full furniture, range
please visit www.next.co.uk

Need Help?

With assembly instruction
Missing or damaged parts
CALL: 03337778999

Produced in India for next retail ltd. 835778- 2026

NEXT

BOURTON WHITE LARGE SIDEBOARD-835778

Assembly instruction

Components supplied. Please use this guide if you require replacement parts

Ref	Dimensions	Visual	QTY	Ctn
1	1400 X 405 X 635 mm	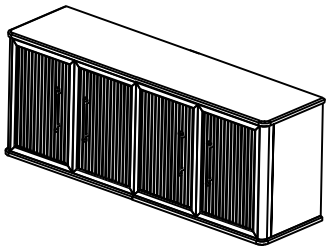	1	1
2	76 X 110X 110mm	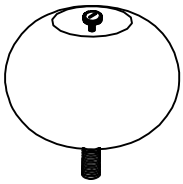	4	1
3	76 X 110X 110mm	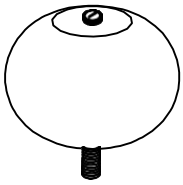	1	1
4		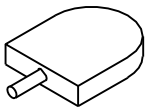	8	1
5	651 X 335 X 15mm	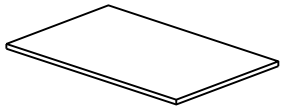	2	1

Produced in India for next retail ltd. 835778- 2026

NEXT

BOURTON WHITE LARGE SIDEBOARD-835778

Assembly instruction

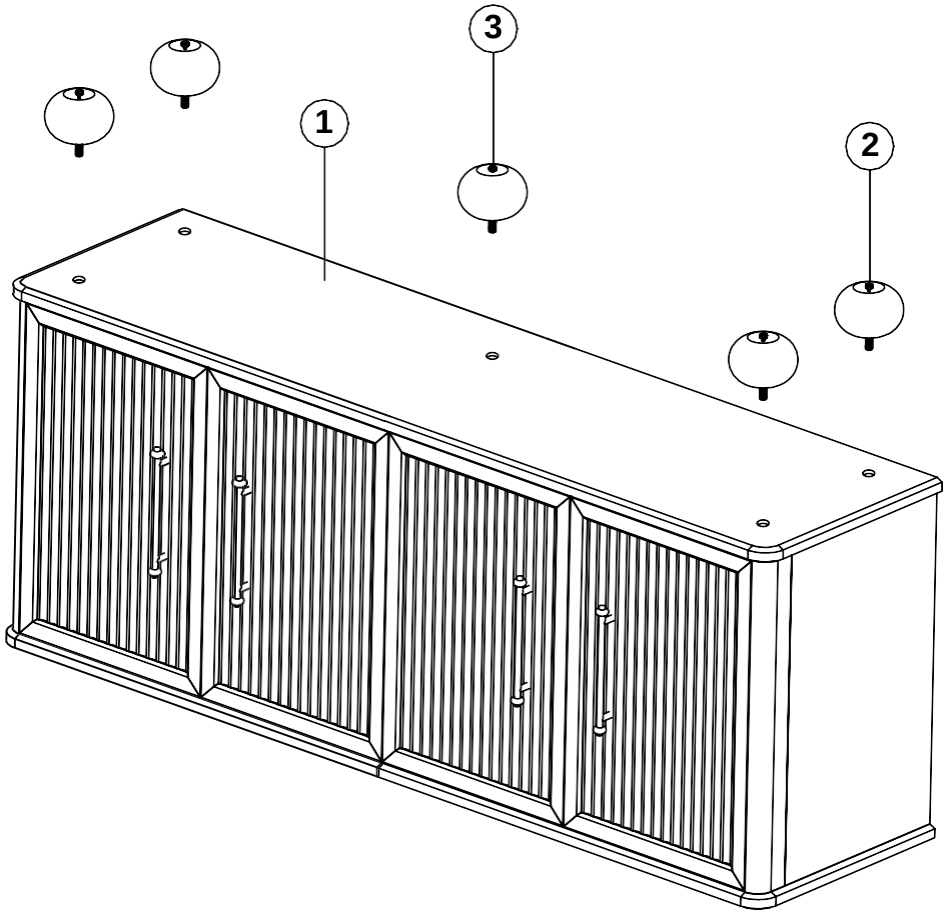

Produced in India for next retail ltd. 835778- 2026

NEXT

BOURTON WHITE LARGE SIDEBOARD-835778

Assembly instruction

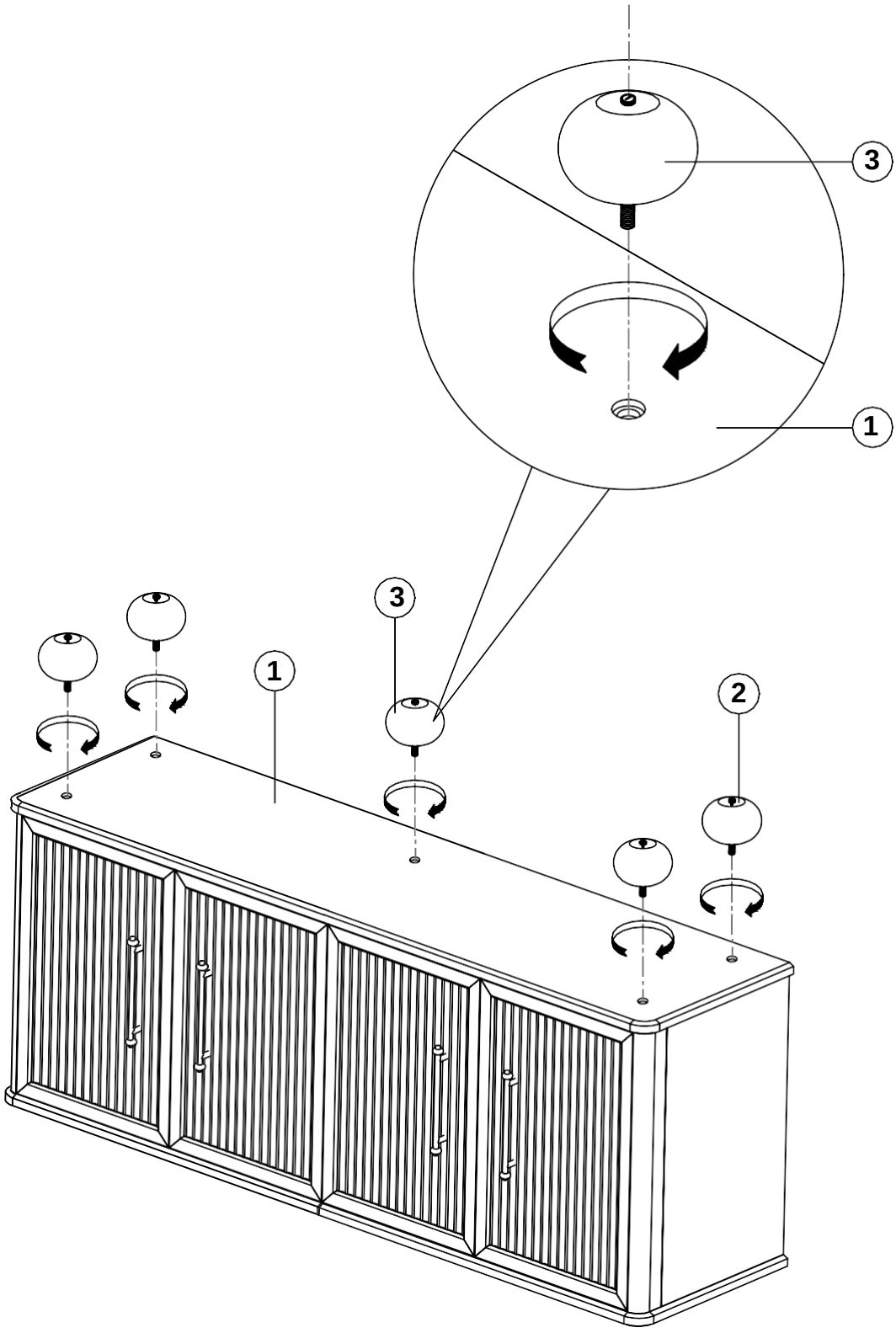

Produced in India for next retail ltd. 835778- 2026

NEXT

BOURTON WHITE LARGE SIDEBOARD-835778

Assembly instruction

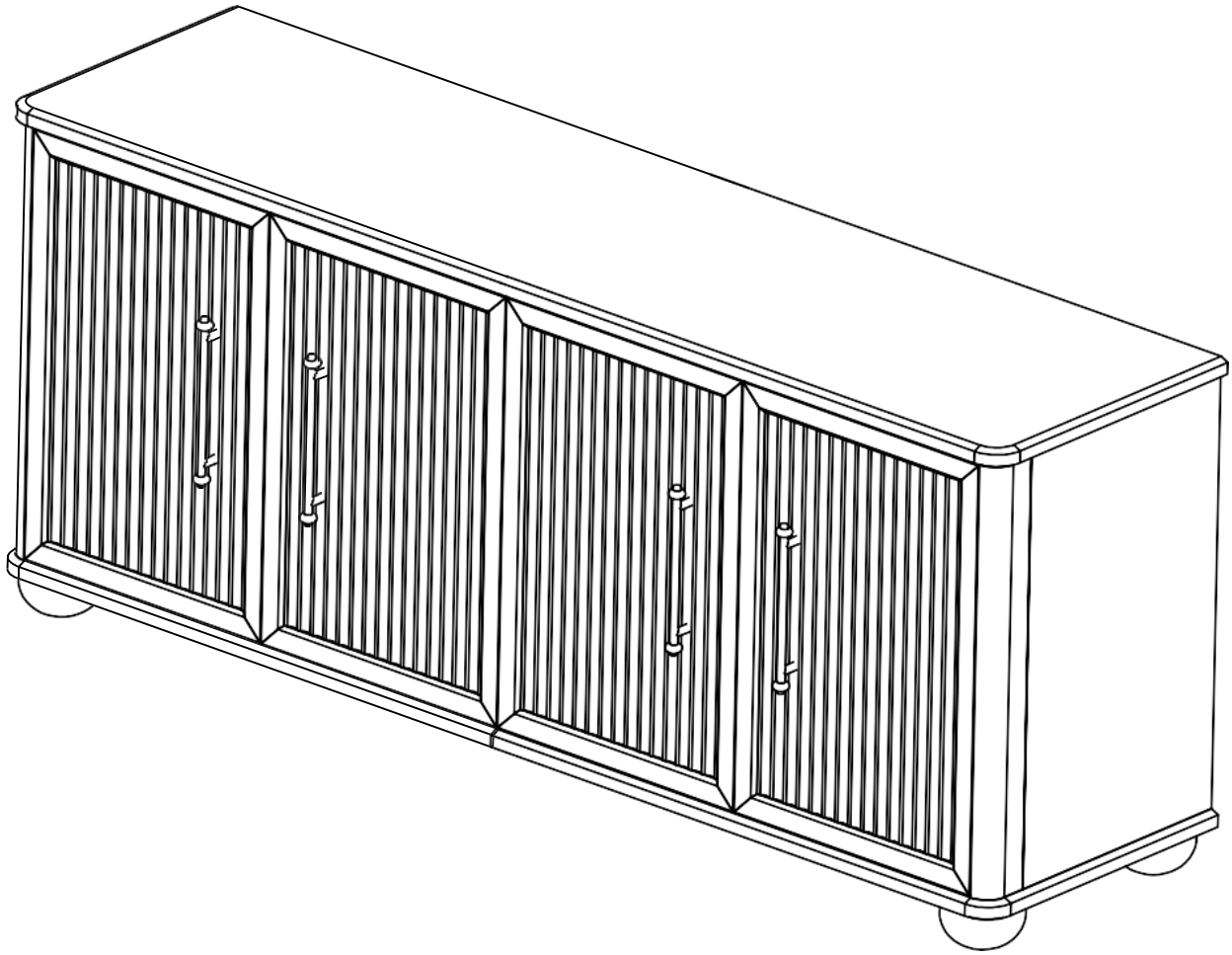

Produced in India for next retail ltd. 835778- 2026

NEXT

BOURTON WHITE LARGE SIDEBOARD-835778

Assembly instruction

Step 1- The wall strap must be fitted for safety reasons.

Please fix one end of the strap onto the wall and secure the furniture.

N.B. Wall fixings are not included, please source suitable fixings for your wall type. If in doubt, please consult a qualified tradesperson.

WARNING: Always ensure the wall to be drilled is free from hidden electrical wires, water and gas pipes.

Periodically check all fittings and wall fixings to ensure they have not come loose and re-tighten as necessary

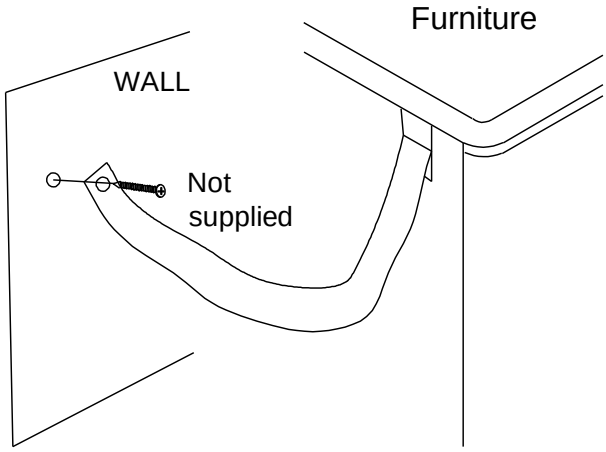

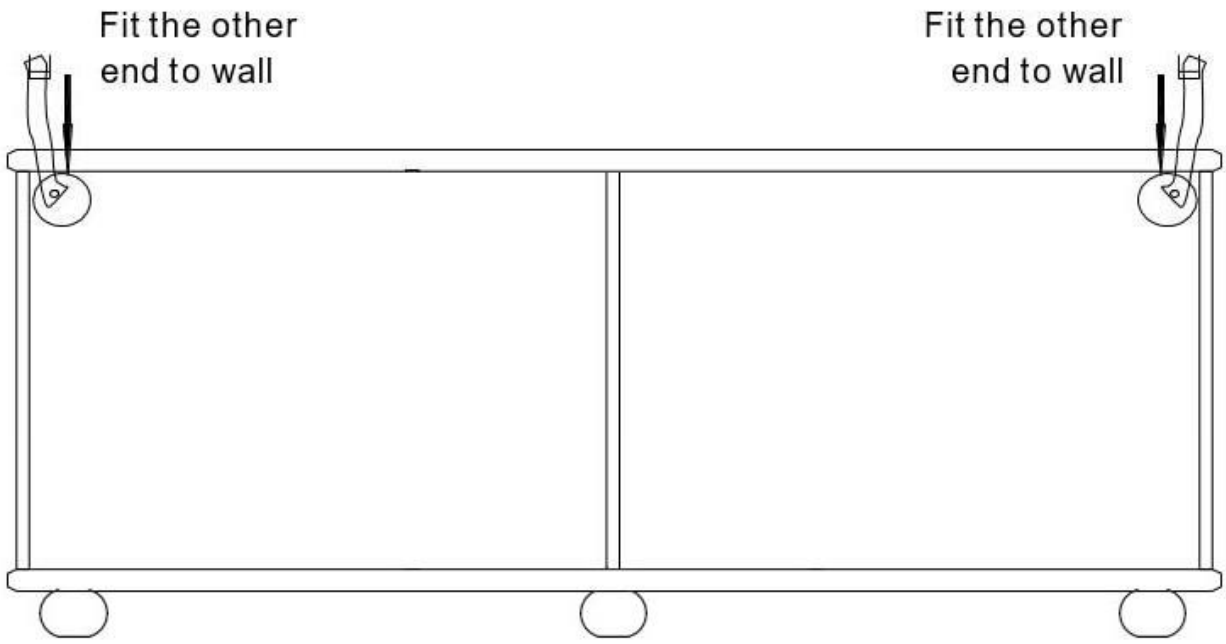

NEXT

BOURTON WHITE LARGE SIDEBOARD-835778

Assembly instruction

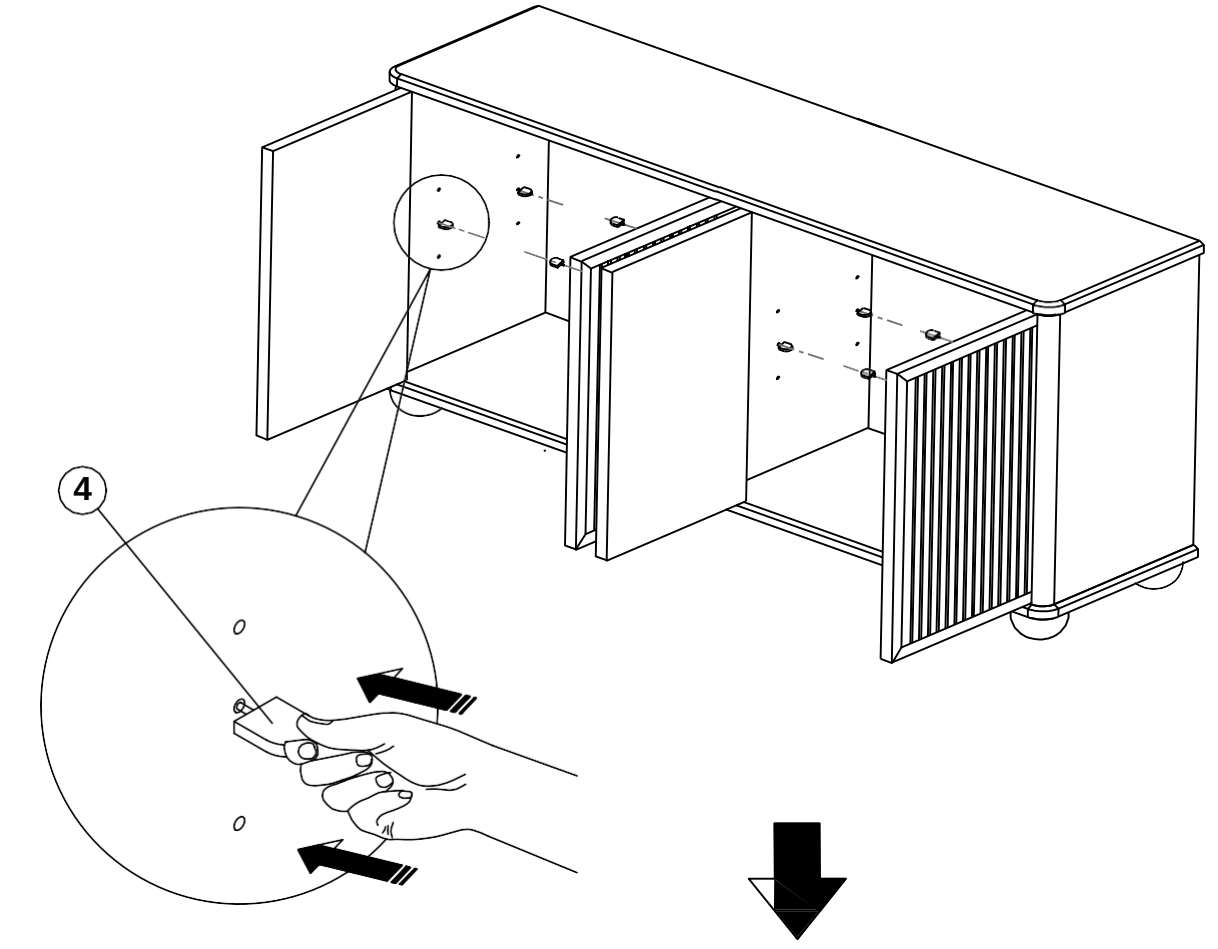

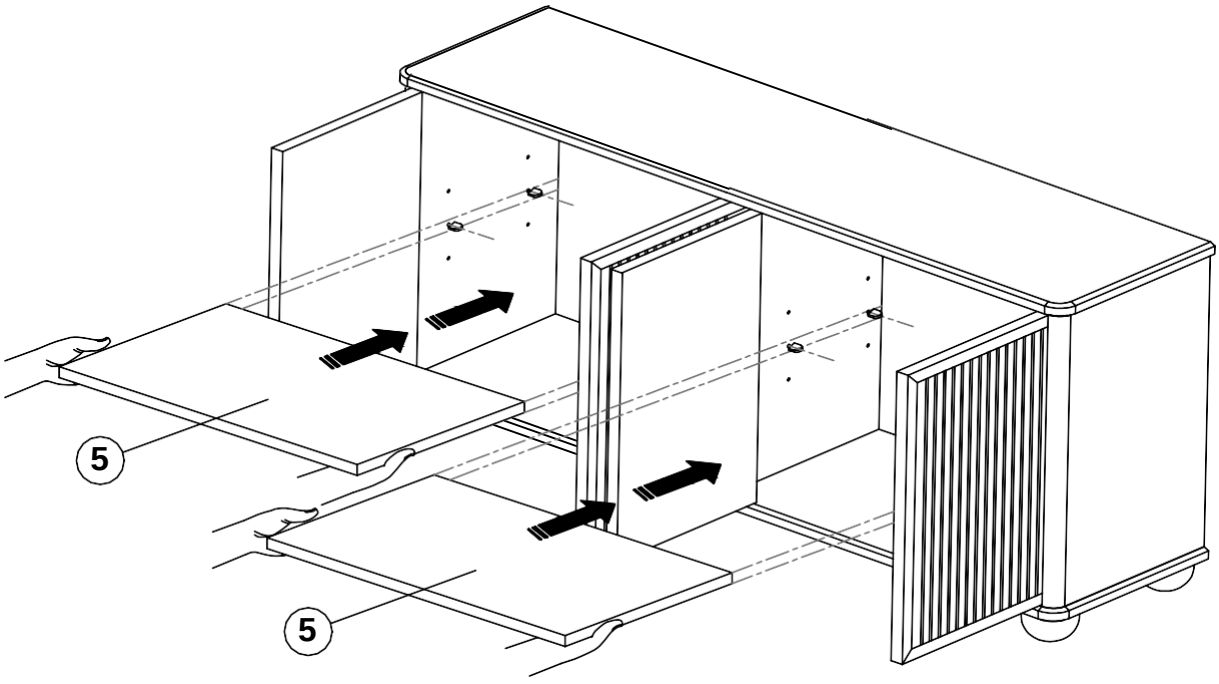

Produced in India for next retail ltd. 835778- 2026

NEXT

BOURTON WHITE LARGE SIDEBOARD-835778

Assembly instruction

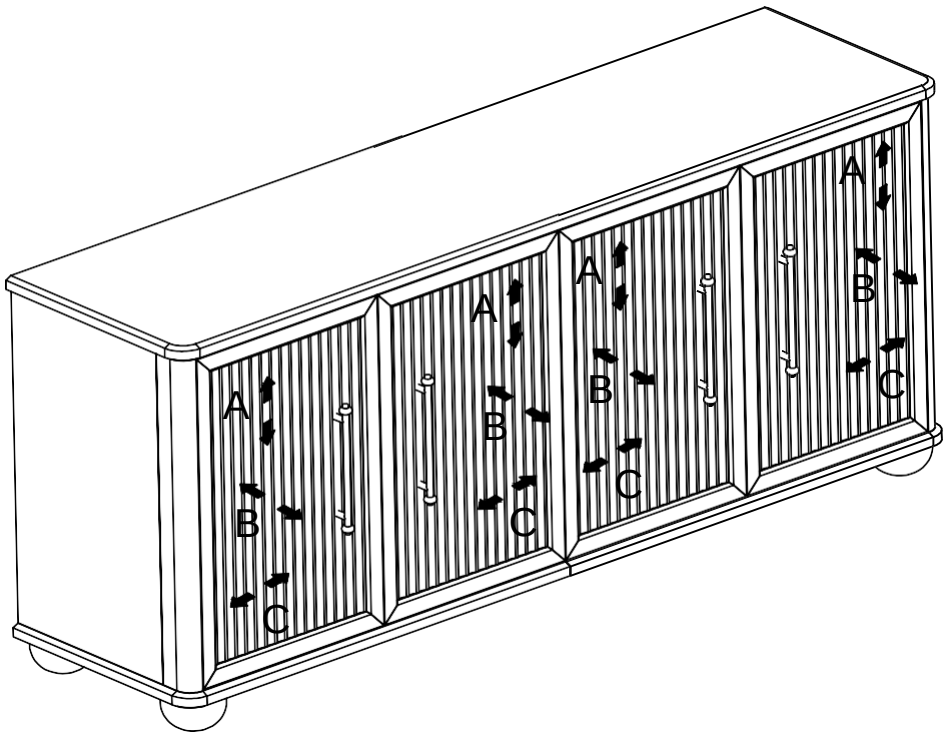

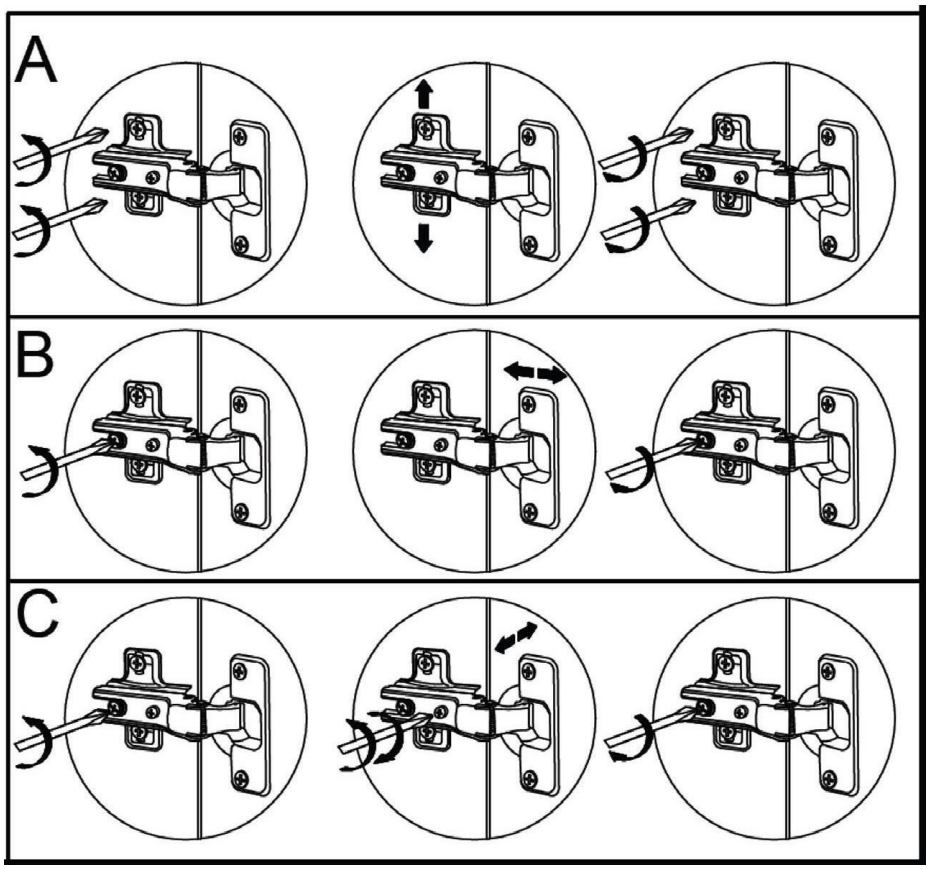

Produced in India for next retail ltd. 835778- 2026

NEXT

BOURTON WHITE LARGE SIDEBOARD-835778

Assembly instruction

Actual product size
H71.1XW140XD40.5CM

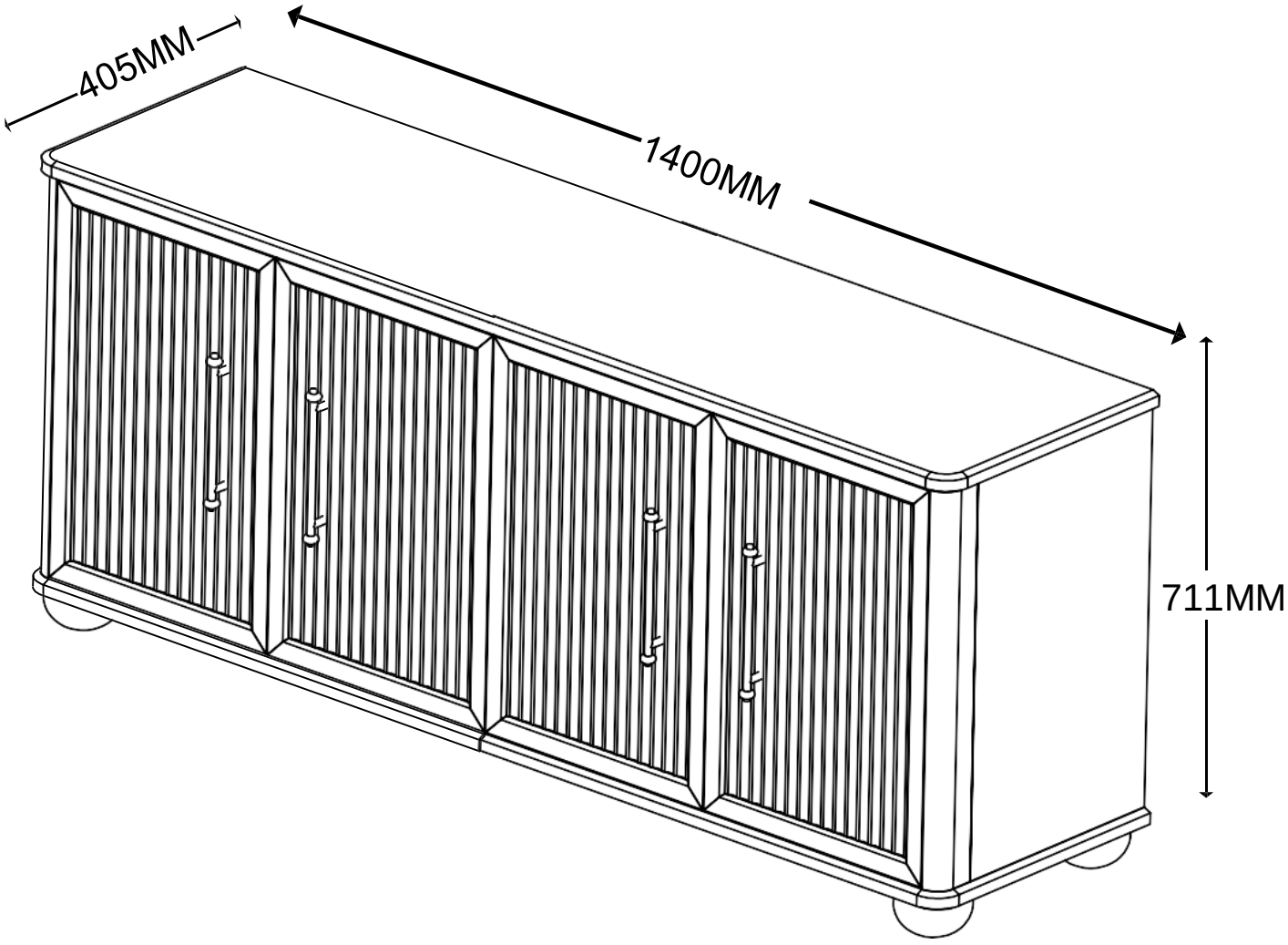

Produced in India for next retail ltd. 835778- 2026