ALIX MIDI CHEST OF DRAWERS

A34364

Assembly instructions

Actual product size

H90 x W92 x D55.5cm

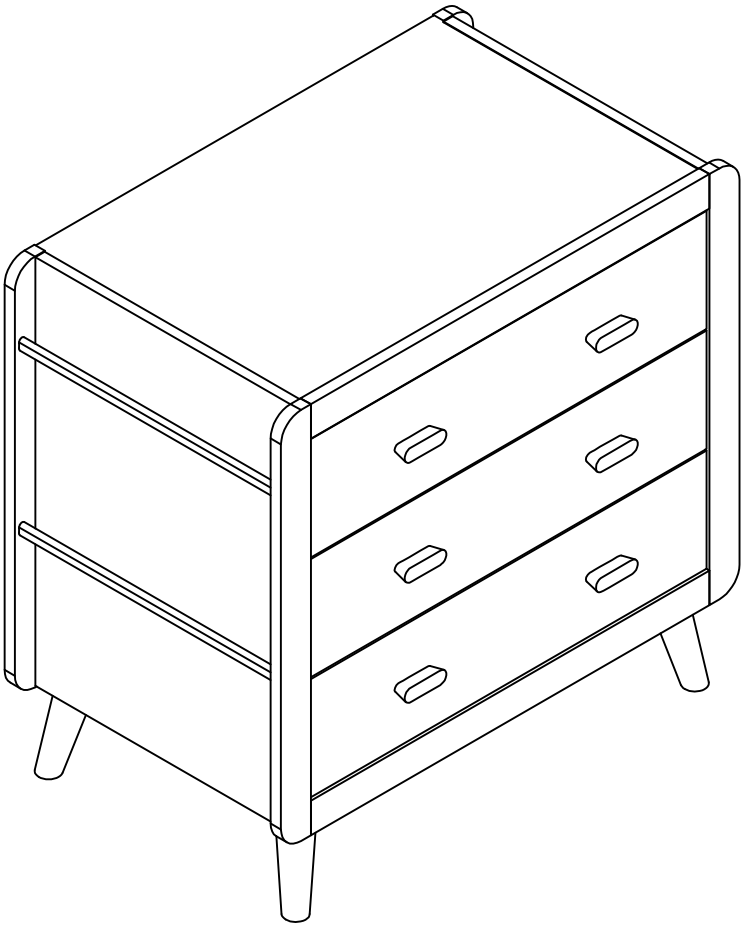

Need Help ?

With: Assembly instruction

Missing or damaged parts

CALL: 0333 777 8999

IMPORTANT -
RETAIN FOR FUTURE REFERENCE -
READ CAREFULLY.

Produced in China for Next Retail Ltd.
A34364-2022-V1.

ALIX MIDI CHEST OF DRAWERS

A34364

Assembly instructions

BEFORE YOU START

Number of people required to assemble

Two people are required to assemble this item

Time to assemble : 30 minutes

Tools required

not supplied

Warnings

We suggest you retain these instructions for future reference
Keep fittings out of children's reach and keep children well away from the construction area
This product should only be used on firm, level ground
Please periodically check all fittings and re-tighten as necessary
Please do not sit or stand on your furniture
Avoid exposing the furniture to excessive heat or direct sunlight as this can cause deterioration of the colour
Unwrap all packaging materials and place the components on top of the carton box or on a clean floor to protect it from damage.

Do's

We suggest you spend a short time reading through this leaflet before you start
When you are ready to start, make sure that you have the right tools and plenty of space
Unwrap all packaging materials and place the components on a clean surface to protect it from damage, We recommend that the packaging is used to protect the surfaces during assembly
Carefully check that you have all the parts before beginning assembly
Due to the size of the product we recommend that it is assembled in the room intended for use
Ensure the product is fully assembled as illustrated and all fixings fully tightened before use

Don'ts

Do not drag or pull your furniture
Do not use silicone based furniture polish. Silicone in furniture polishes can break down the finish

ALIX MIDI CHEST OF DRAWERS

A34364

Assembly instructions

GETTING TO KNOW YOUR PRODUCT

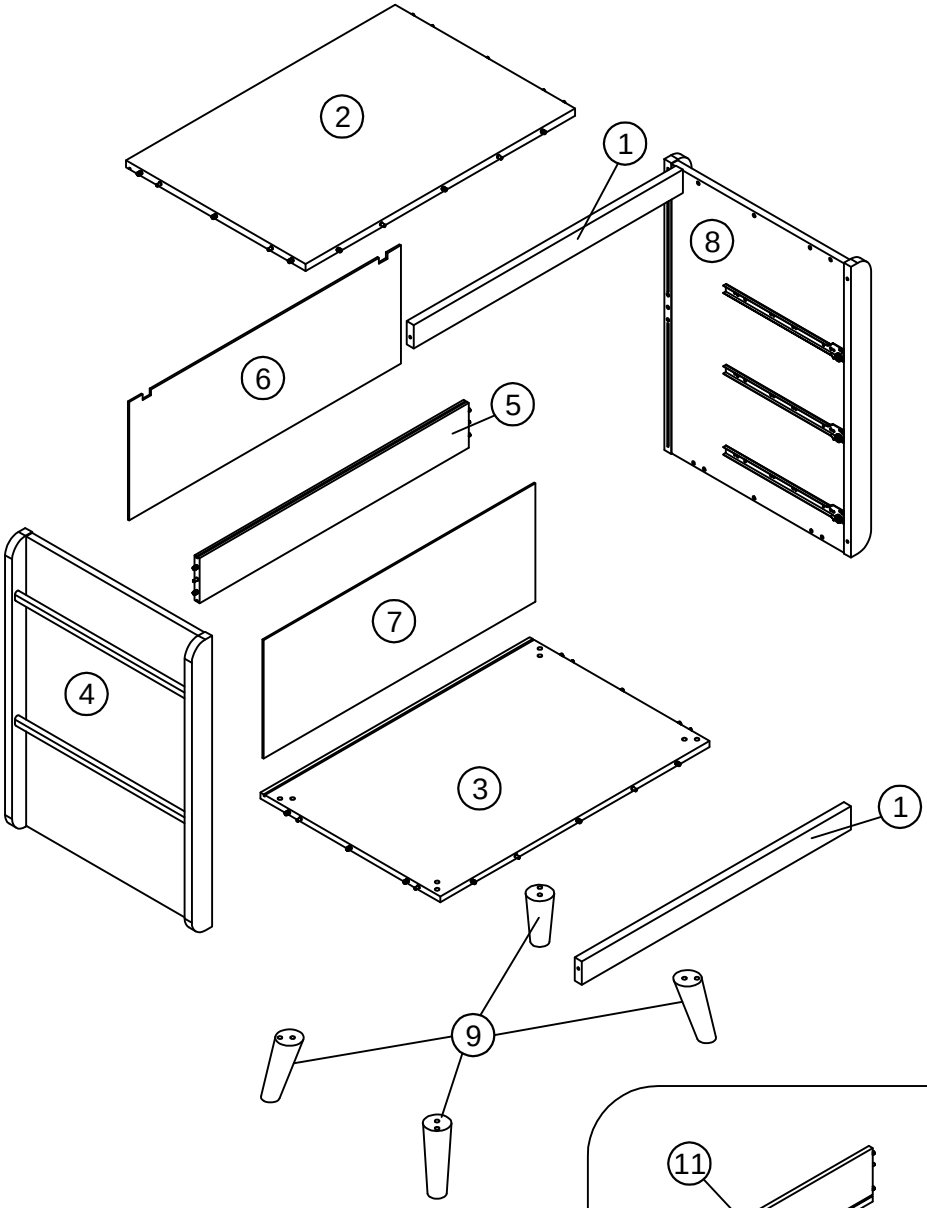

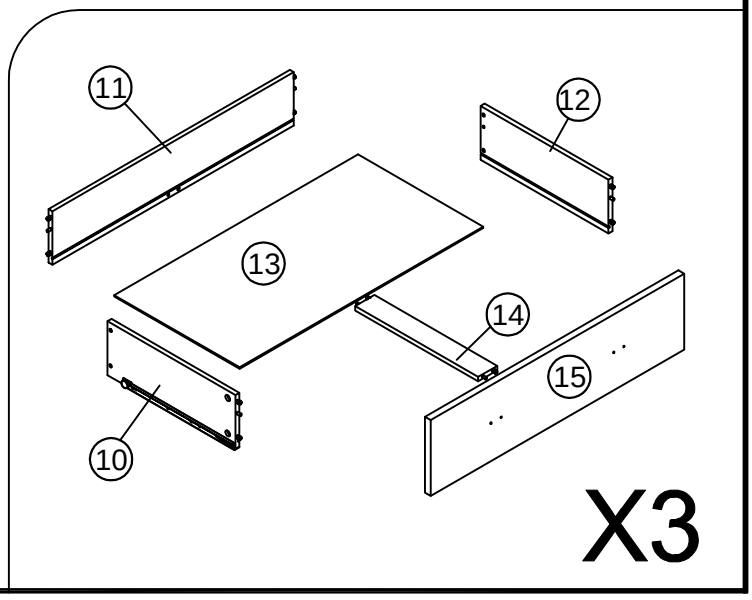

ALIX MIDI CHEST OF DRAWERS

A34364

Assembly instructions

Components supplied. Please use this guide if you require replacement parts.

Ref	Dimensions	Visual	Qty	Ctn
1	6 x 80cm	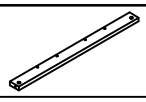	2	2
2	53.5 x 80cm	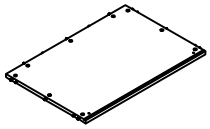	1	2
3	53.5 x 80cm	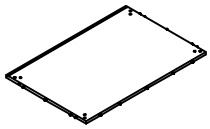	1	2
4	55.5 x 75cm	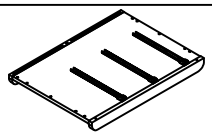	1	1
5	13 x 80cm	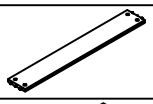	1	2
6	30 x 81cm	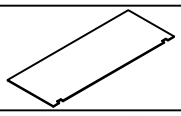	1	2
7	31x 81cm	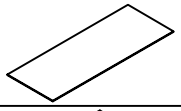	1	2
8	55.5 x 75cm	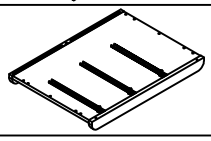	1	1
9	6 x 15cm		4	2
10	14.5 x 40cm		3	2
11	14.5 x 75cm	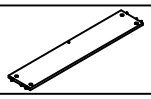	3	2
12	14.5 x 40cm		3	2
13	39 x 76cm	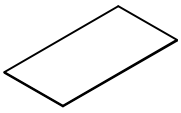	3	2
14	6 x 38.5cm		3	2
15	20.5 x 79.5cm	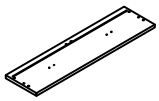	3	2

ALIX MIDI CHEST OF DRAWERS

A34364

Assembly instructions

Fixtures and fittings supplied (actual size)

Ref	Dimensions	Qty	Spare Qty
B2	Ø15 x 10mm	N/A	2
B3	Ø15 x 12mm	4	2
B8	Ø8 x 38mm	N/A	2
D3	Ø6 x 30mm	N/A	2
D6	Ø8 x 30mm	N/A	2
Z23	Ø4 x 25mm	12	2
B12	Ø7.5 x 33mm	4	1
S41	Ø4 x 16mm	2	1
W17	Ø8 x 35mm	8	1

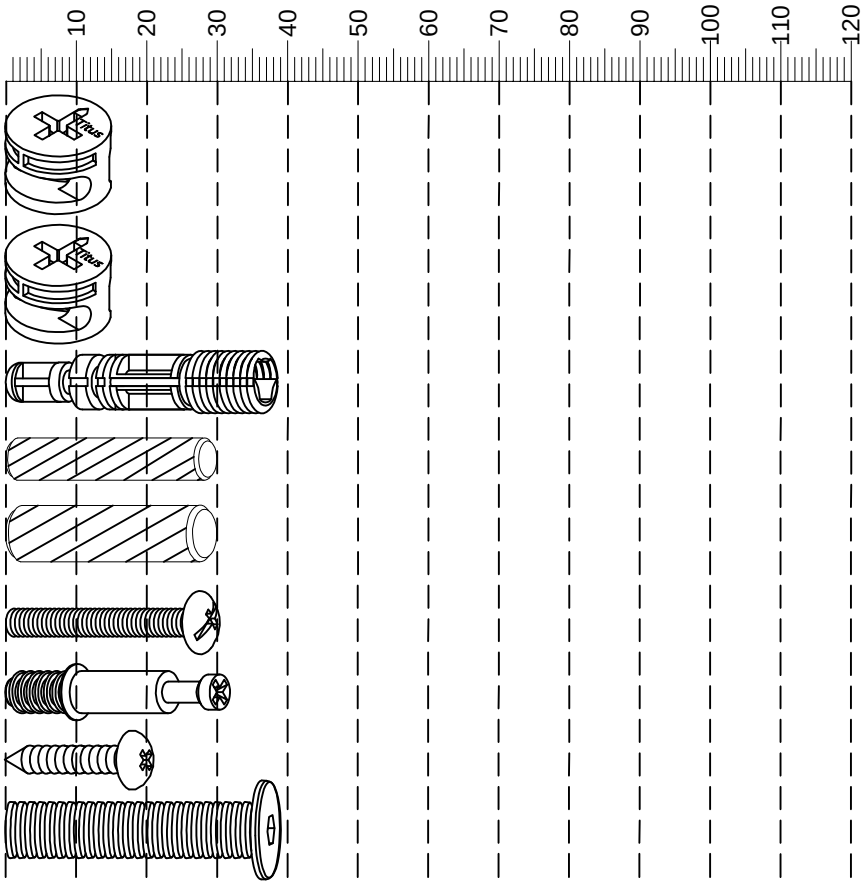

Fixtures and fittings supplied (not to scale)

Ref	Dimensions	Qty	Spare Qty	Visual
T4	N/A	2	N/A	
E43	N/A	6	N/A	
T39	N/A	2	N/A	
T38	N/A	10	2	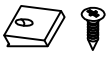

ALIX MIDI CHEST OF DRAWERS

A34364

Assembly instructions

1

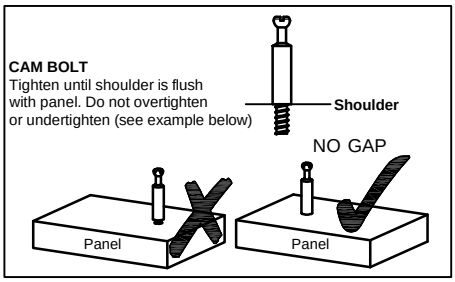

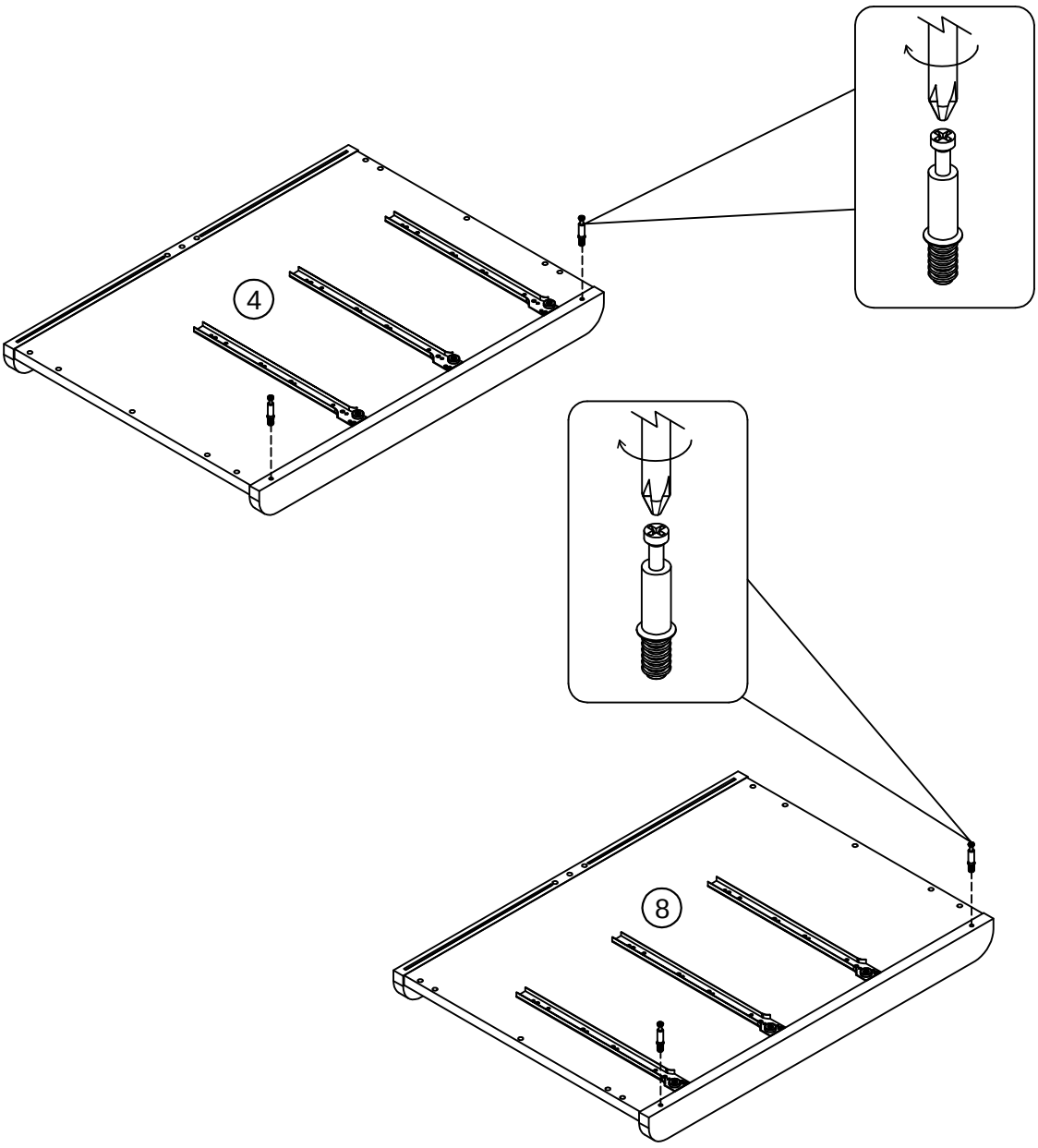

B12	Ø7.5 x 33mm	**4**	PH2 not supplied

ALIX MIDI CHEST OF DRAWERS

A34364

Assembly instructions

2

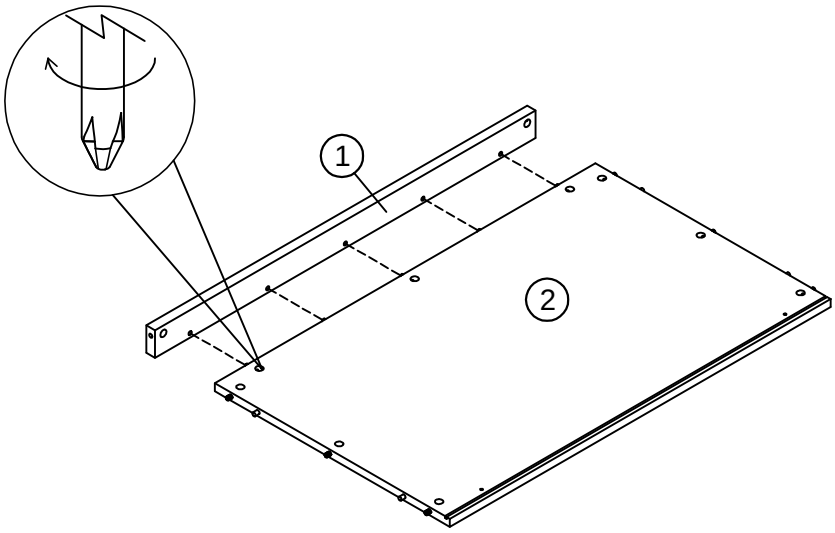

3

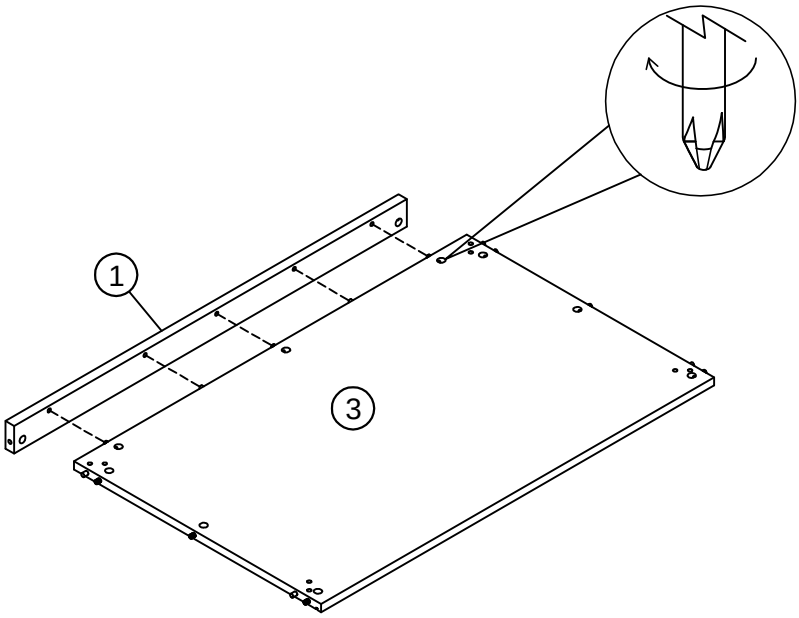

ALIX MIDI CHEST OF DRAWERS

A34364

Assembly instructions

4

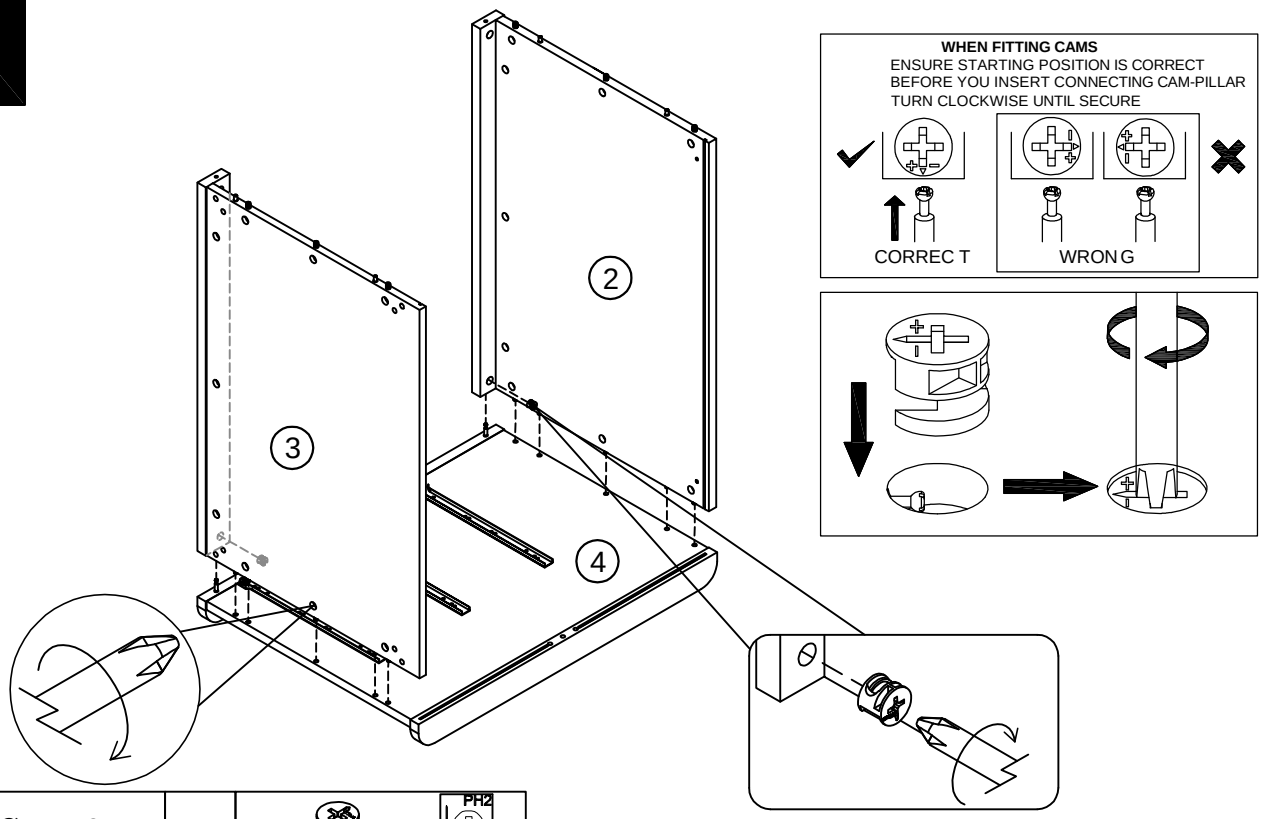

B3	Ø15 x 12mm	2	PH2 not supplied

5

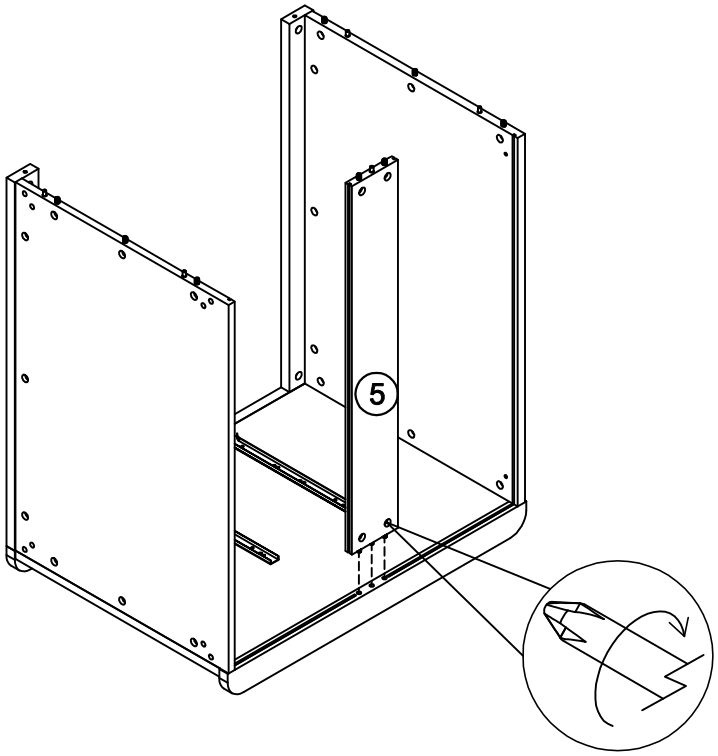

ALIX MIDI CHEST OF DRAWERS

A34364

Assembly instructions

6

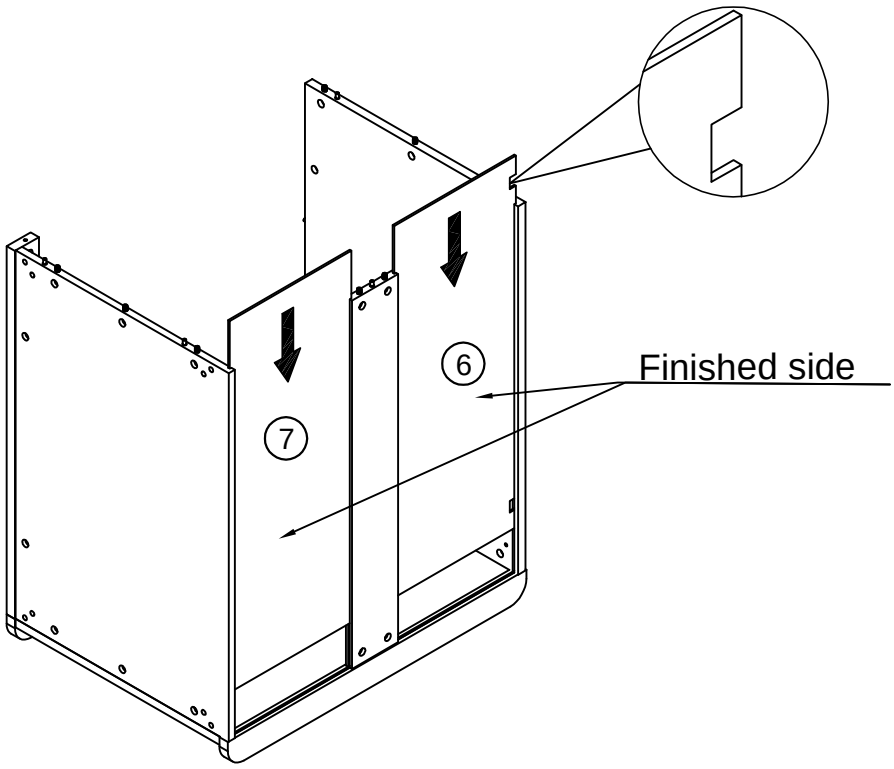

7

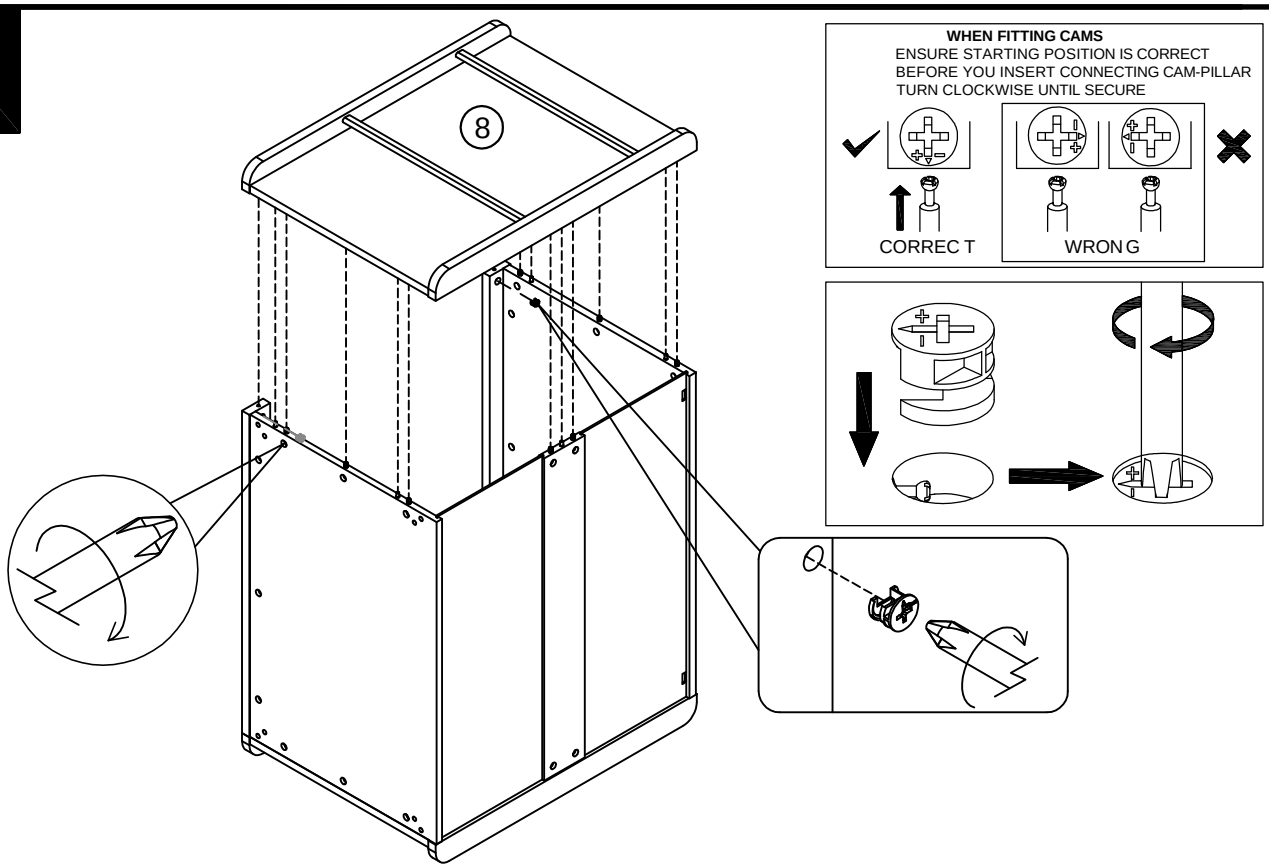

B3	Ø15 x 12mm	**2**	PH2 not supplied

ALIX MIDI CHEST OF DRAWERS

A34364

Assembly instructions

8

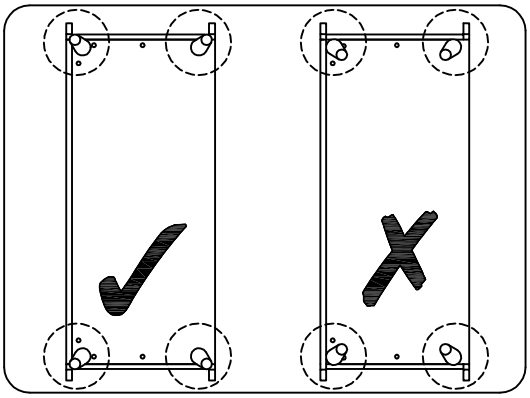

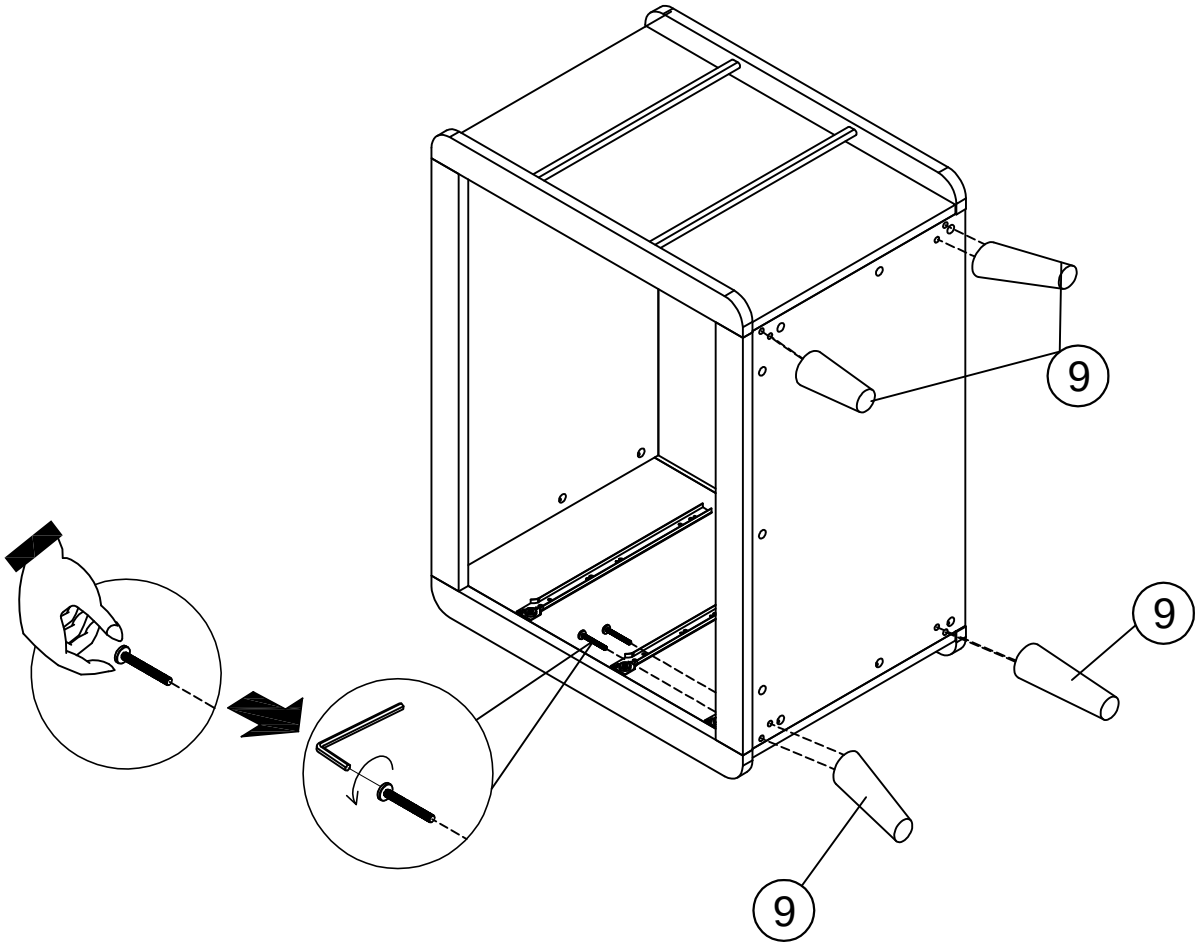

T4	N/A	2	
W17	Ø8 x 35mm	8	

ALIX MIDI CHEST OF DRAWERS

A34364

Assembly instructions

9

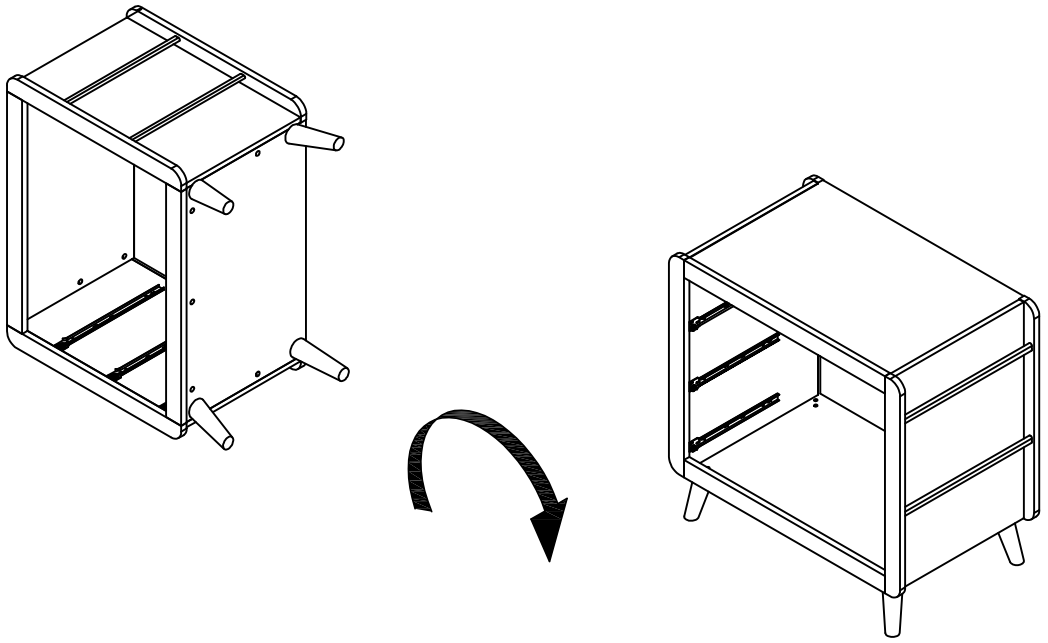

10

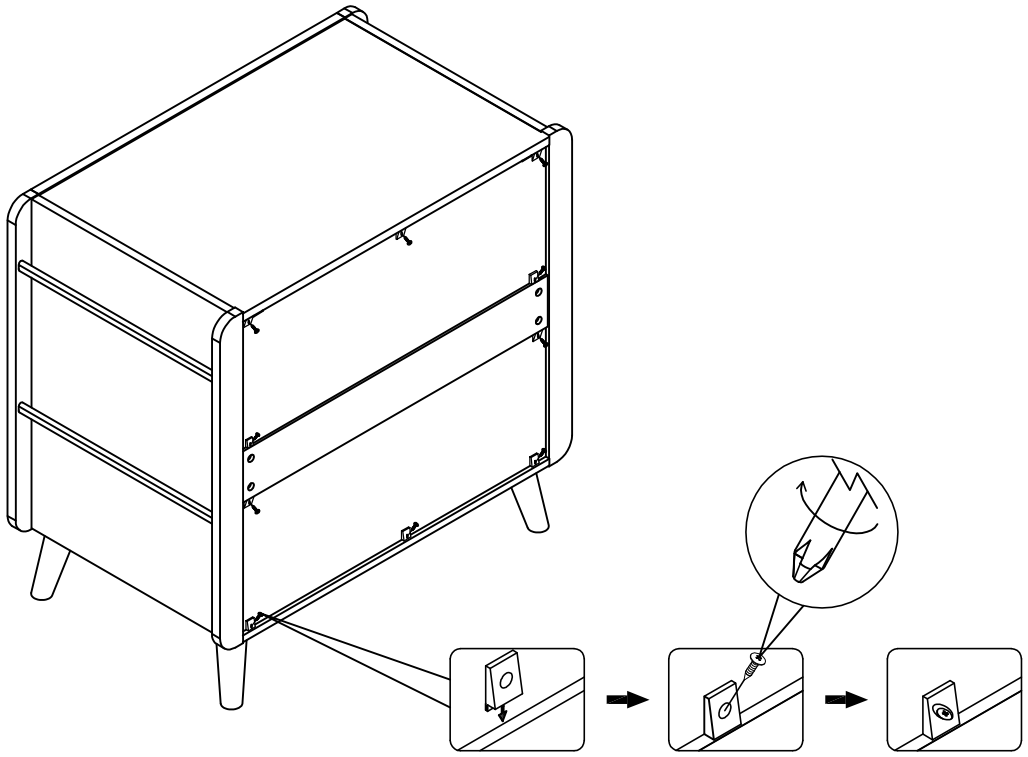

T38	N/A	10	PH2 not supplied

11

We recommend the use of the wall attachment bracket/strap provided for safety reasons.
Secure the strap to the wall with an appropriate screw and wall plug for your wall type (not provided).
To hide the strap behind the unit ,drill the hole lower than the top of unit.

Attach the other end of the strap to the underside of the top panel with screw.
Warning: Always ensure intended wall area to be drilled is free from hidden electrical wires,water and gas pipes.
NB:Wall fixings are not included-Please source suitable fixing for your wall type.
If in doubt please consult a qualified trades person.

Please ensure you secure your product to the wall for your and your family's safety before you use it.

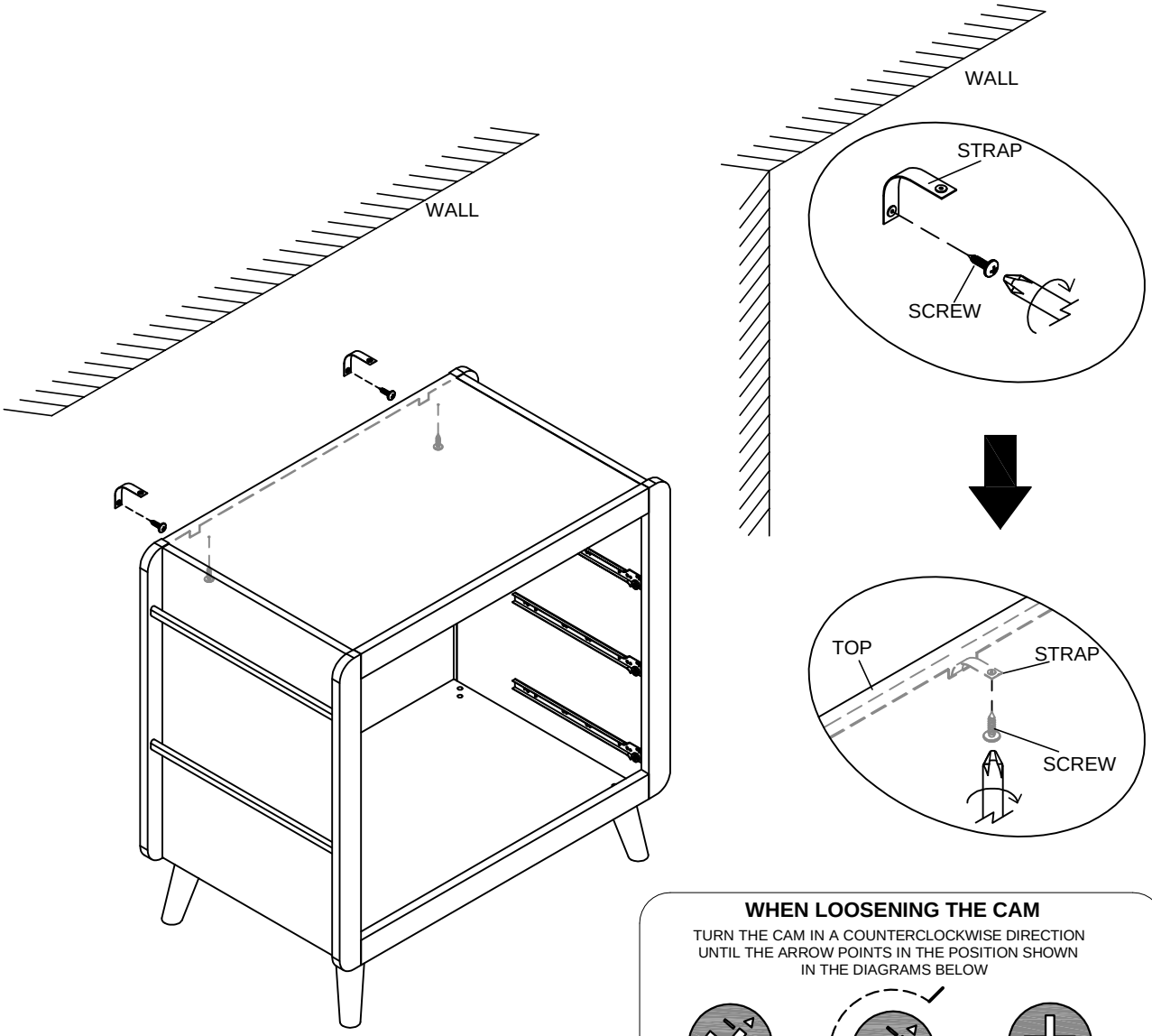

WHEN LOOSENING THE CAM

TURN THE CAM IN A COUNTERCLOCKWISE DIRECTION UNTIL THE ARROW POINTS IN THE POSITION SHOWN IN THE DIAGRAMS BELOW

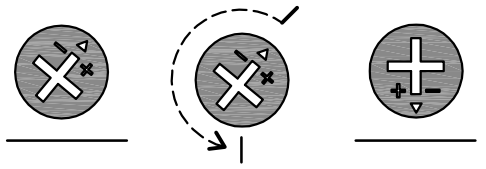

MAXIMUM LOCK | TURN TO UNLOCK | UNLOCKED

T39	**N/A**	2	
S41	Ø4 x 16mm	2	PH2 not supplied

ALIX MIDI CHEST OF DRAWERS

A34364

Assembly instructions

12

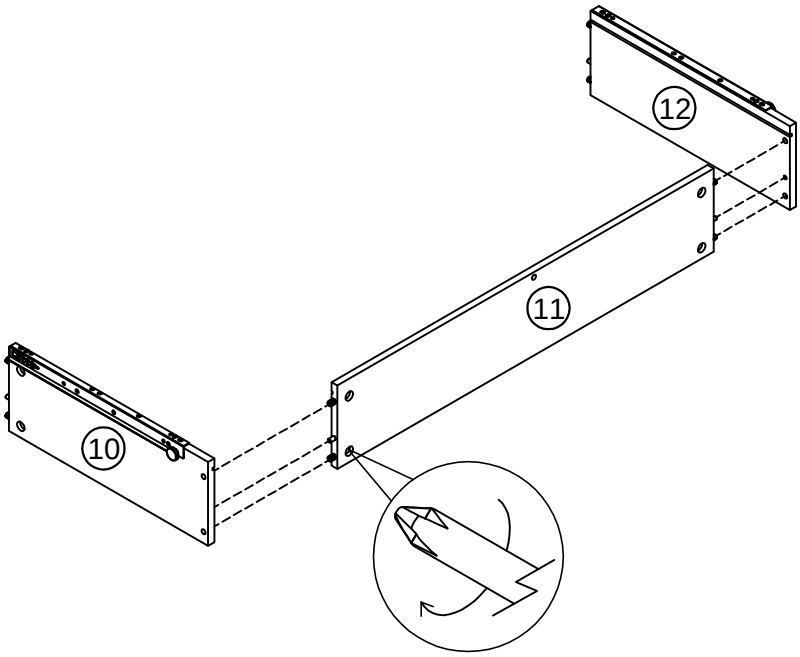

X3

13

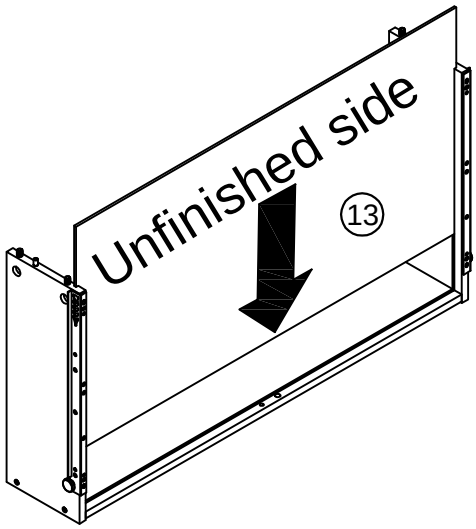

X3

14

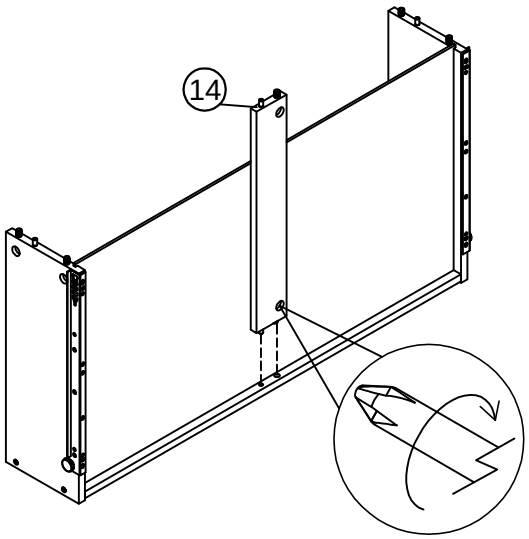

X 3

15

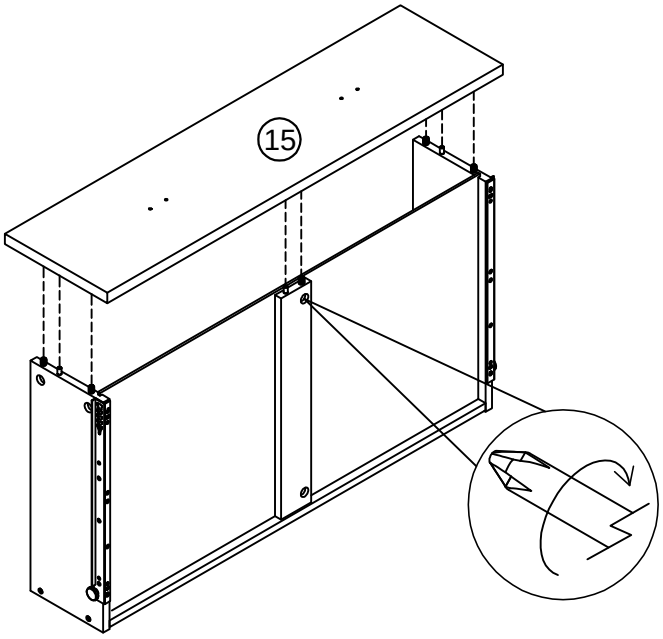

X 3

16

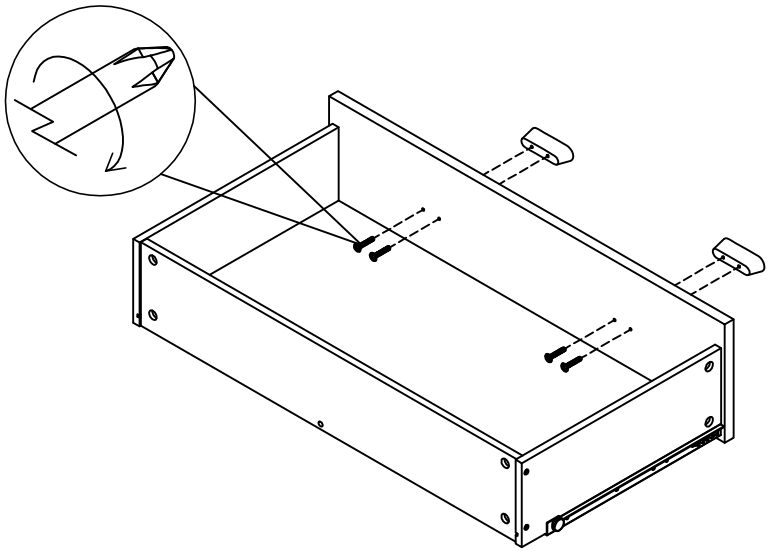

X 3

E43	N/A	6	
Z23	Ø4 x 25mm	12	PH2 not supplied

17

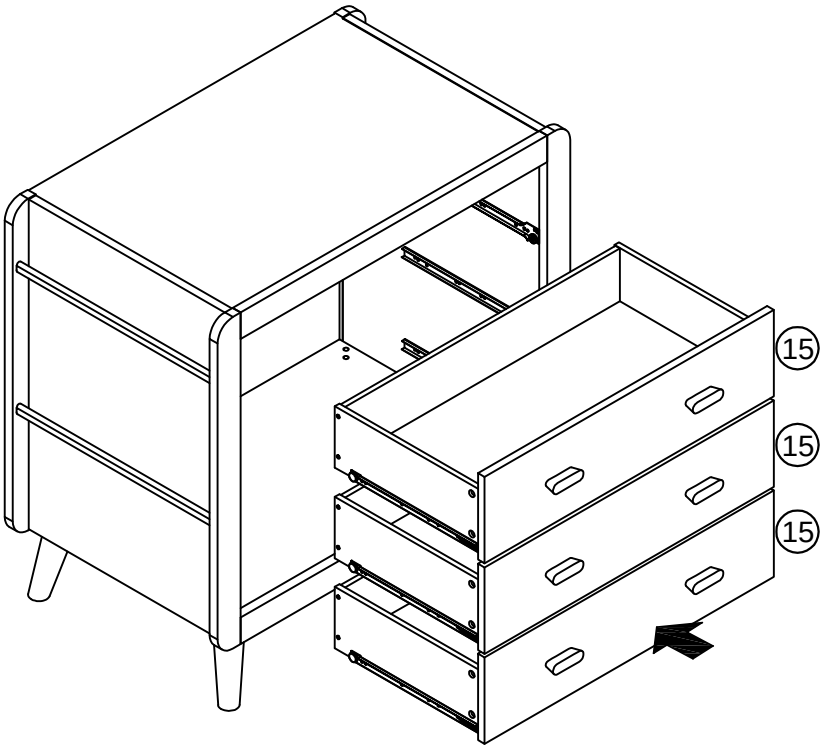

ALIX MIDI CHEST OF DRAWERS

A34364

Actual product size
H90 x W92 x D55.5cm

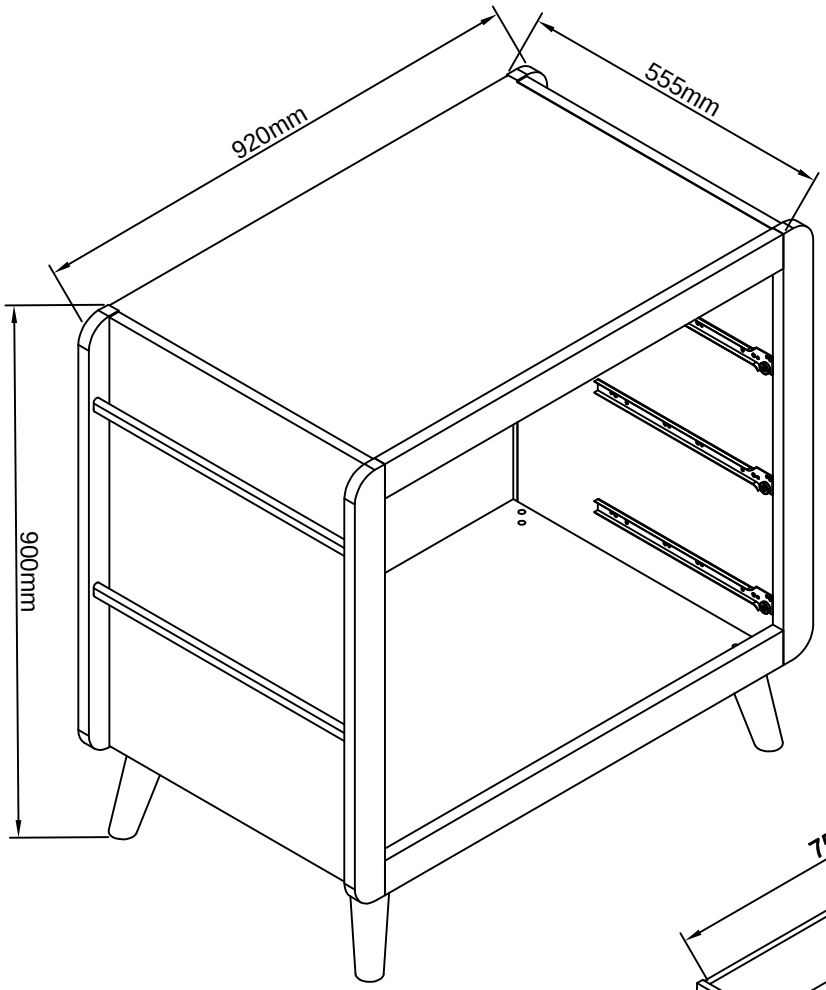

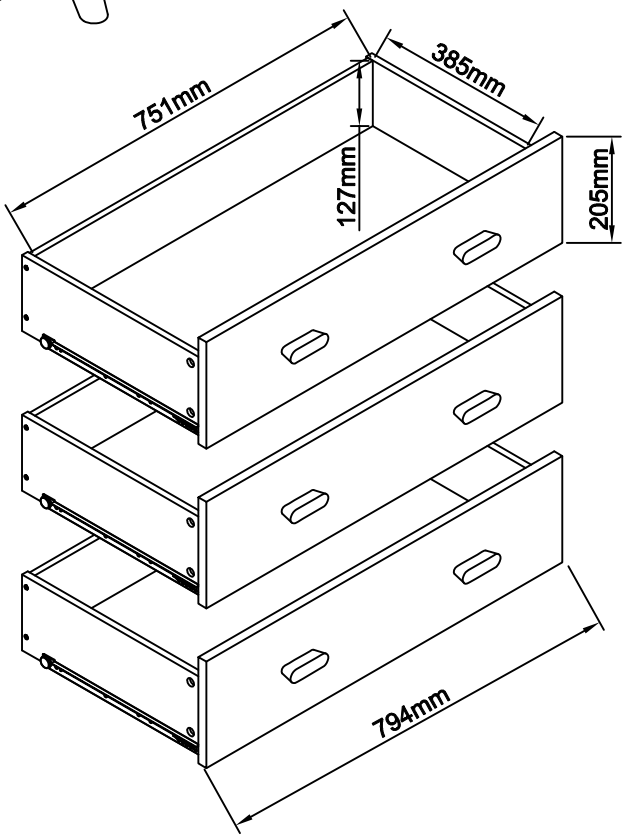

Produced in China for Next Retail Ltd.
A34364-2022-V1.

ALIX MIDI CHEST OF DRAWERS
A34364

Warnings

We suggest you retain these instructions for future reference
Keep fittings out of children's reach and keep children well away from the construction area
This product should only be used on firm, level ground
Please periodically check all fittings and re-tighten as necessary
Please do not sit or stand on your furniture
Avoid exposing the furniture to excessive heat or direct sunlight as this can cause deterioration of the colour
Unwrap all packaging materials and place the components on top of the carton box or on a clean floor to protect it from damage.

Do's

We suggest you spend a short time reading through this leaflet before you start
When you are ready to start, make sure that you have the right tools and plenty of space
Unwrap all packaging materials and place the components on a clean surface to protect it from damage, We recommend that the packaging is used to protect the surfaces during assembly
Carefully check that you have all the parts before beginning assembly
Due to the size of the product we recommend that it is assembled in the room intended for use
Ensure the product is fully assembled as illustrated and all fixings fully tightened before use

Don'ts

Do not drag or pull your furniture
Do not use silicone based furniture polish. Silicone in furniture polishes can break down the finish

Missing parts

If you are missing any fixtures and fittings for your product.
Please contact our customer service team on 0333 777 8999
and they will be happy to arrange for a replacement to be sent
to you free of charge.

Home service technicians

If you have a fault with your product, please contact our customer service team on 0333 777 8999. If you have had the product for 28 days or less you may be offered a replacement,refund or for a fully trained home service technician to visit your home to assess the fault and repair the product where possible. If you have had the product for more than 28 days we will send an independant home service technician to review and repair the product where possible and recommend further action.

You can write to us at

Home Customer Services
Next Retail Ltd.
Desford Road,
Leicester,
LE19 4AT

To view our full furniture range please visit www.next.co.uk

Testing

This product conforms to FRQG C001: 2016 and C004: 2016+A1: 2017

PRODUCT SUPPLIED WITH WALL FIXING STRAPS

Produced in China for Next Retail Ltd.
A34364-2022-V1.