CAC RIBBED CALISTO DINING TABLE

CLARKE & CLARKE

Q90098/AA7228

Assembly Instructions

Actual product size
H75 x W121.5 x D121.5cm

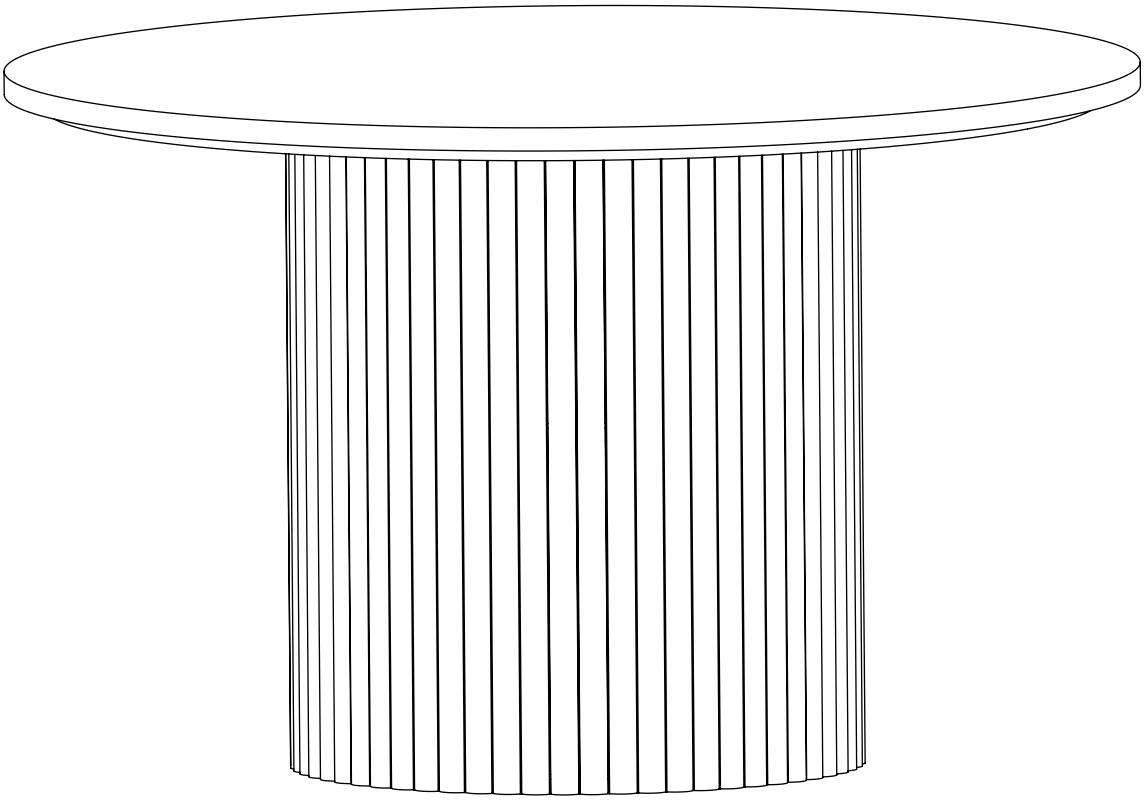

Need Help?

With: Assembly instructions
Missing or damaged parts

CALL: 0333 777 8999

IMPORTANT – RETAIN FOR FUTURE REFERENCE

Produced in India
Q90098/AA7228-2024-V1

CAC RIBBED CALISTO DINING TABLE

CLARKE & CLARKE

Q90098/AA7228
Assembly Instructions

BEFORE YOU START

Warnings

We suggest you retain these instructions for future reference

Keep fittings out of children's reach and keep children well away from the construction area

This product should only be used on firm, level ground

Please periodically check all fittings and re-tighten as necessary

Please do not sit or stand on your furniture

Avoid exposing the furniture to excessive heat or direct sunlight as this can cause deterioration of the colour

Unwrap all packaging materials and place the components on top of the carton box or on a clean floor to protect it from damage

Do's

We suggest you spend a short time reading through this leaflet before you start

When you are ready to start, make sure that you have the right tools and plenty of space

Unwrap all packaging materials and place the components on a clean surface to protect it from damage,

We recommend that the packaging is used to protect the surfaces during assembly

Carefully check that you have all the parts before beginning assembly

Due to the size of the product we recommend that it is assembled in the room intended for use

Ensure the product is fully assembled as illustrated and all fixings fully tightened before use

To clean your item, please use a soft cloth slightly dampened with water and wipe clean. Then buff with a dry clean cloth

Wood will mellow and change colour over time, we recommend that ornaments and items placed on the surface are moved regularly for the first few months to prevent uneven mellowing.

Don'ts

Do not drag or pull your furniture

Do not use silicone based furniture polish. Silicone in furniture polishes can break down the finish

Never allow any kind of liquid to remain on your furniture.

Absorption can cause wood to warp or finishes to de-laminate

Do not place hot items (e.g. hot drinks) directly on to the wood surface. Please make sure you use a placement or coaster

Number of people required to assemble

Two persons are required to assemble this item

Time to assemble

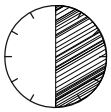

30 Minutes

Tools required

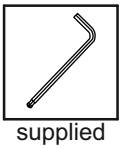

supplied

Missing parts

If you are missing any fixtures and fittings for your product please contact our customer service team on 0333 777 8999 and they will be happy to arrange for a replacement to be sent to you free of charge.

Home service technicians

If you have a fault with your product please contact our customer service team on 0333 777 8999. If you have had the product for 28 days or less you may be offered a replacement, refund or for a fully trained home service technician to visit your home to assess the fault and repair the product where possible. If you have had the product for more than 28 days we will send an independent home service technician to review and repair the product where possible and recommend further action.

You can write to us at

Home Customer Services
Next Retail Ltd,
Desford Road,
Leicester,
LE19 4AT

To View our full furniture range please visit www.next.co.uk

GETTING TO KNOW YOUR PRODUCT

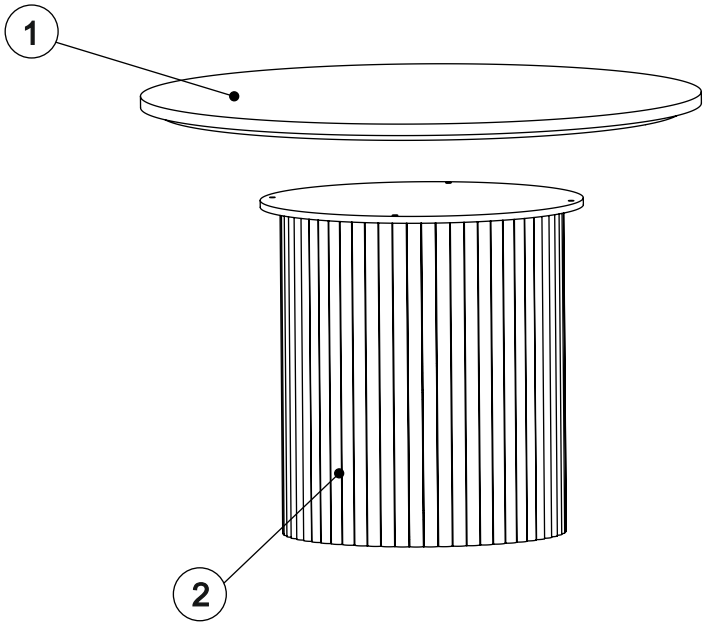

Product supplied.

Ref	Dimensions	Visual	Qty	Ctn
1	121.5 X 121.5cm		1	1
2	72.5 X 70cm	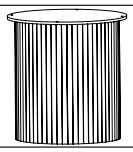	1	1

CAC RIBBED CALISTO DINING TABLE

Q90098/AA7228

Assembly Instructions

Fixtures and Fittings supplied (actual size)

Ref	Dimensions	Quantity	*Extra Fittings
A	M8 x 30 mm	4	1
B	ø20 mm	4	1
C	20 x 18mm	NA	1

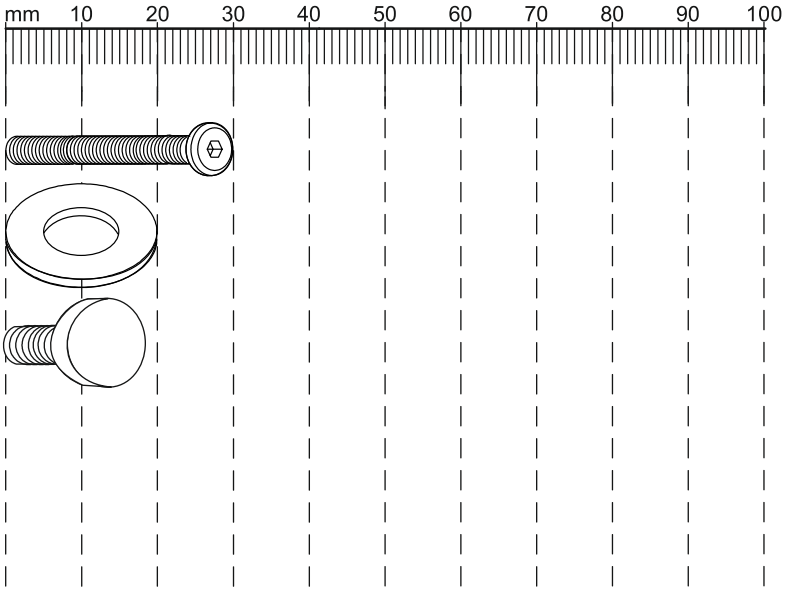

Fixtures and fittings supplied (not to scale)

Ref	Dimensions	Visual	Qty	*Extra Fittings
D	5 mm Key		1	N/A

* Extra Fittings included in case of loss or damage

CAC RIBBED CALISTO DINING TABLE

CLARKE & CLARKE

Q90098/AA7228

Assembly Instructions

1

Note: Match the labels e.g. A on leg to A on top

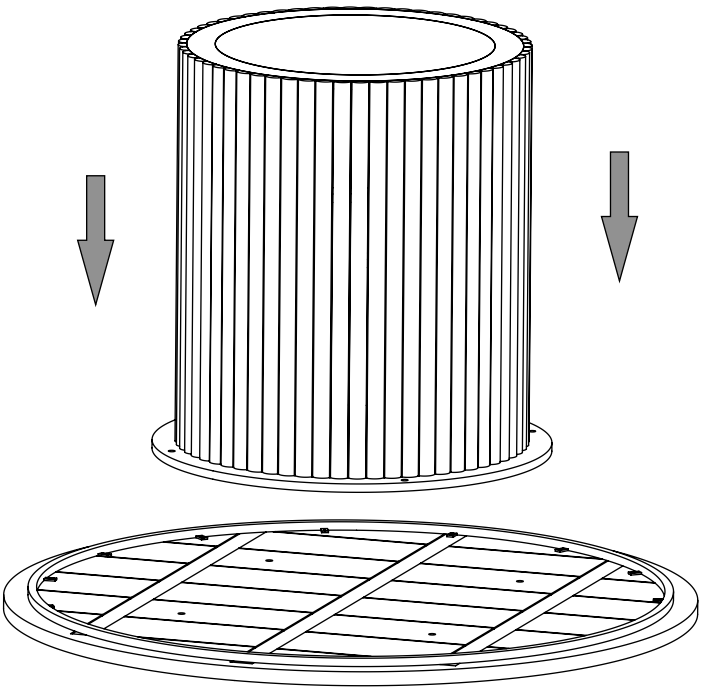

2

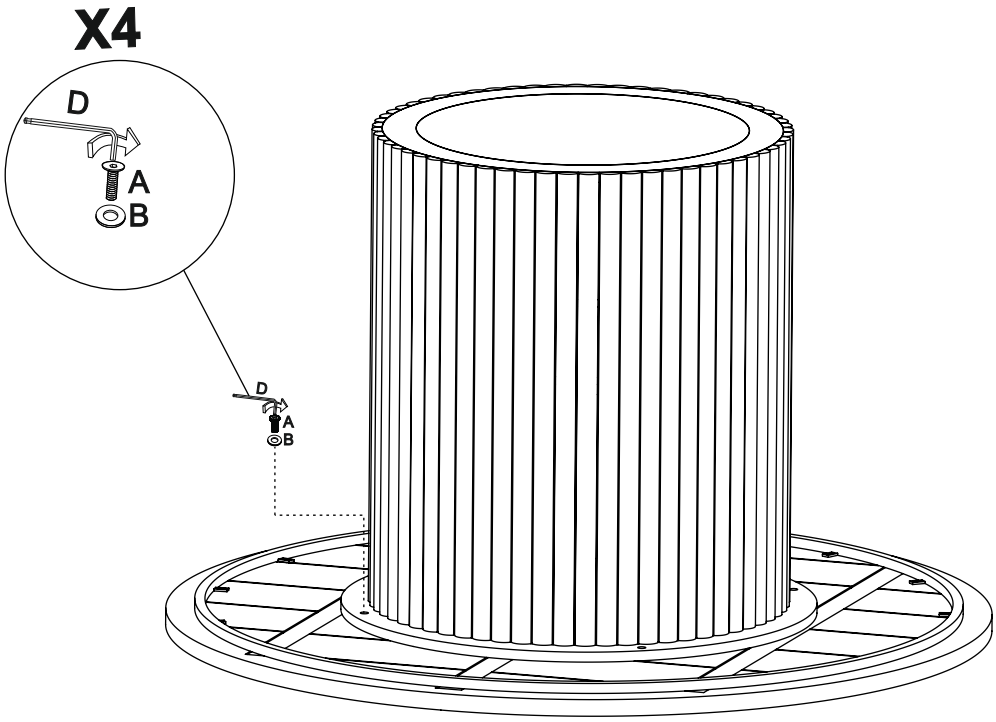

supplied D	A x 4 8 x 30mm 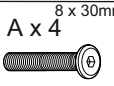	B x 4 Ø20mm 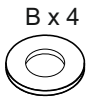

Note: Do not fully tighten until all fittings are in position.

CAC RIBBED CALISTO DINING TABLE

CLARKE & CLARKE

Q90098/AA7228

Assembly Instructions

Actual product size
H75 x W121.5 x D121.5cm

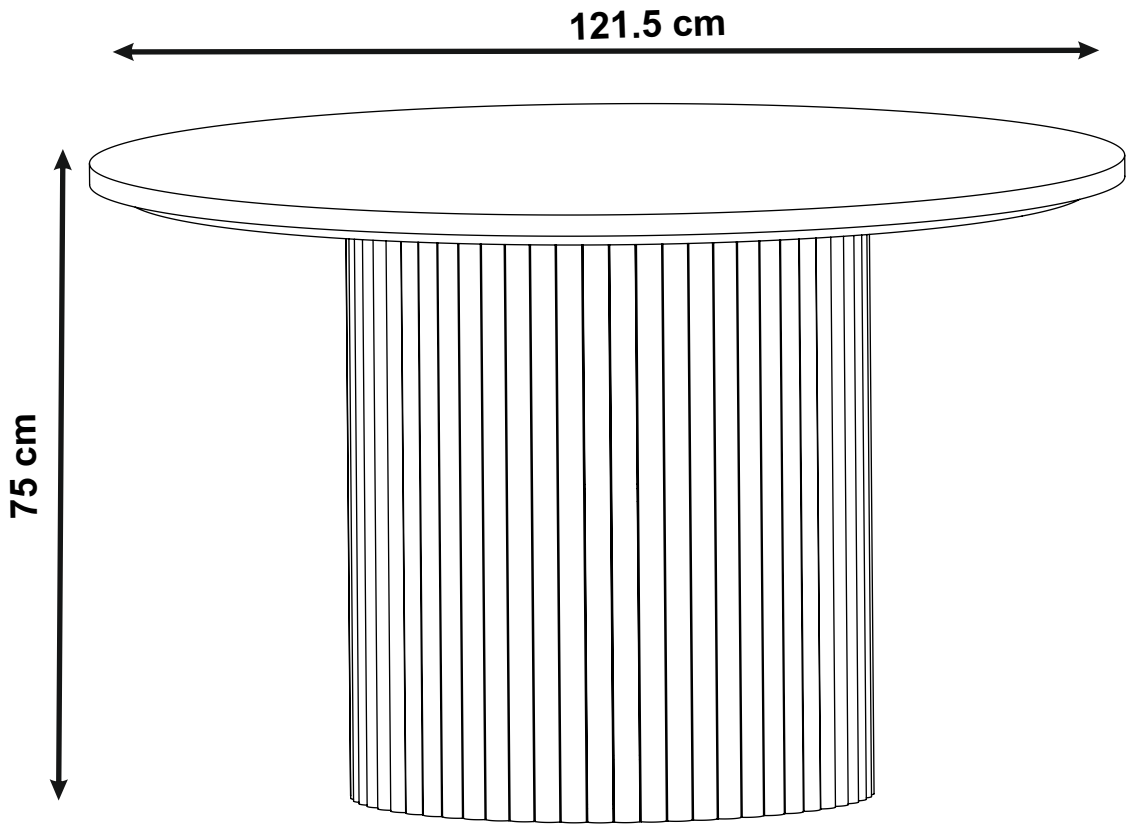

Produced in India
Q90098/AA7228-2024-V1