NEXT

HAYFORD CONSOLE TO DINING TABLE

AV2337

Assembly instructions

Actual product size

H78x W120x D40cm
H75.5x W120x D80cm

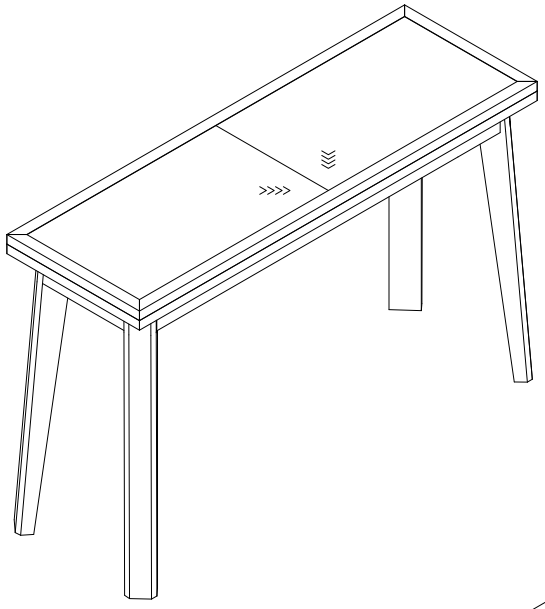

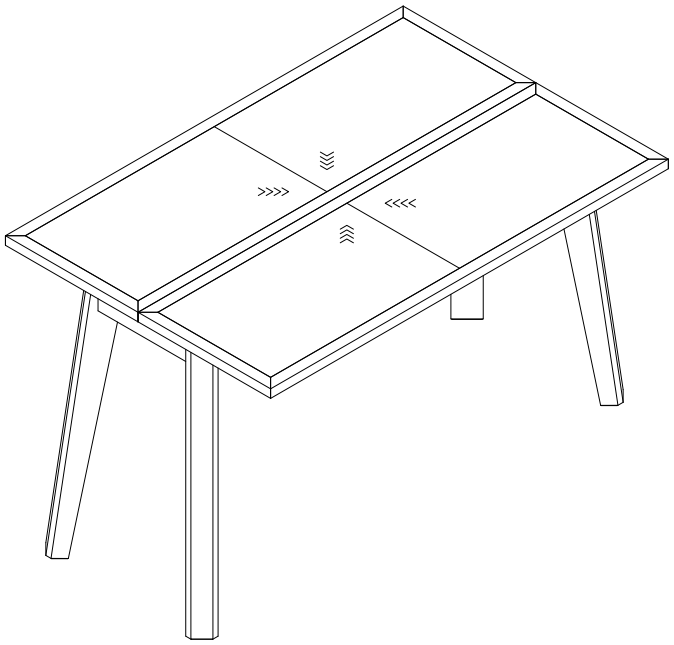

Need Help ?

With: Assembly instruction
Missing or damaged parts

IMPORTANT - RETAIN FOR FUTURE REFERENCE

CALL: 0333 777 8999

Produced in China for Next Retail Ltd.
AV2337-2025-V1.

NEXT

HAYFORD CONSOLE TO DINING TABLE

AV2337
Assembly instructions

BEFORE YOU START

Number of people required to assemble

Two people are required to assemble this item



Time to assemble : 30 minutes



Tools required

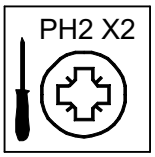

not supplied

Do's

We suggest you spend a short time reading through this leaflet before you start.

When you are ready to start, make sure that you have the right tools and plenty of space.

Unwrap all packaging materials and place the components on a clean surface to protect it from damage,
We recommend that the packaging is used to protect the surfaces during assembly.

Carefully check that you have all the parts before beginning assembly.

Due to the size of this product we recommend that it is assembled in the room intended for use.

Ensure the product is fully assembled as illustrated and all fixings fully tightened before use.

Wipe occasionally with a soft cloth slightly dampened with water. Then buff with a dry clean soft cloth.

Wood will mellow and change colour over time, we recommend that ornaments and items placed on the surface are moved regularly for the first few months to prevent uneven mellowing.

Don'ts

Do not drag or pull your furniture.

Do not rub or scrub the surface when cleaning.

Do not use silicone based furniture polish. Silicone in furniture polishes can break down the finish.

Never allow any kind of liquid to remain on your furniture.
Absorption can cause wood to warp or finishes to de-laminate.

Do not place hot items (e.g. hot drinks) directly on to the wood surface. Please make sure you use a placemat or coaster.

NEXT

HAYFORD CONSOLE TO DINING TABLE

AV2337

Assembly instructions

GETTING TO KNOW YOUR PRODUCT

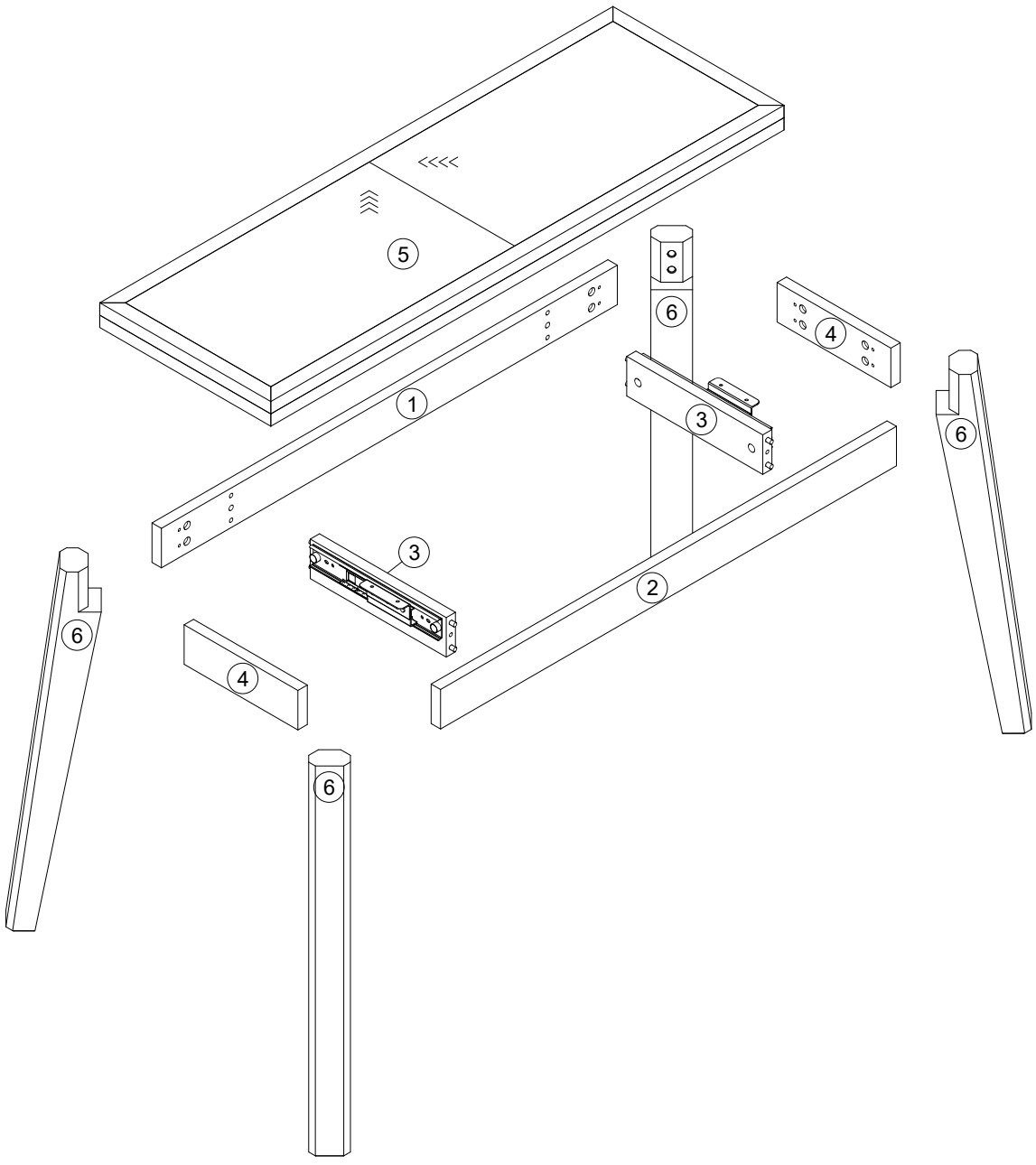

HAYFORD CONSOLE TO DINING TABLE

AV2337

Assembly instructions

Components supplied. Please use this guide if you require replacement parts.

Ref	Dimensions	Visual	Qty	Ctn
1	8x106.5cm	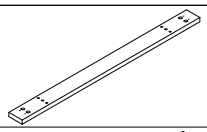	1	1
2	8x106.5cm	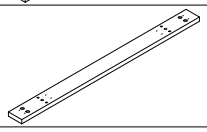	1	1
3	8x32cm	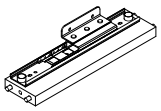	2	1
4	8x26.5cm	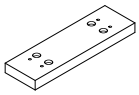	2	1
5	40x120cm	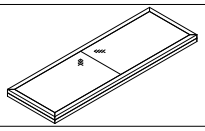	1	1
6	8x74cm	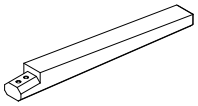	4	1

NEXT HAYFORD CONSOLE TO DINING TABLE

AV2337

Assembly instructions

Fixtures and fittings supplied (actual size)

Ref	Dimensions	Qty	Spare Qty
D6	Ø8 x 30mm	N/A	1
B3	Ø15 x 12mm	4	1
B12	Ø7.5 x 33mm	4	1
W17	Ø8 x 35mm	8	1
U151	Ø4 x 25mm	4	1
S59	Ø6 x 16mm	16	2
Z7	Ø4 x 16mm	4	1

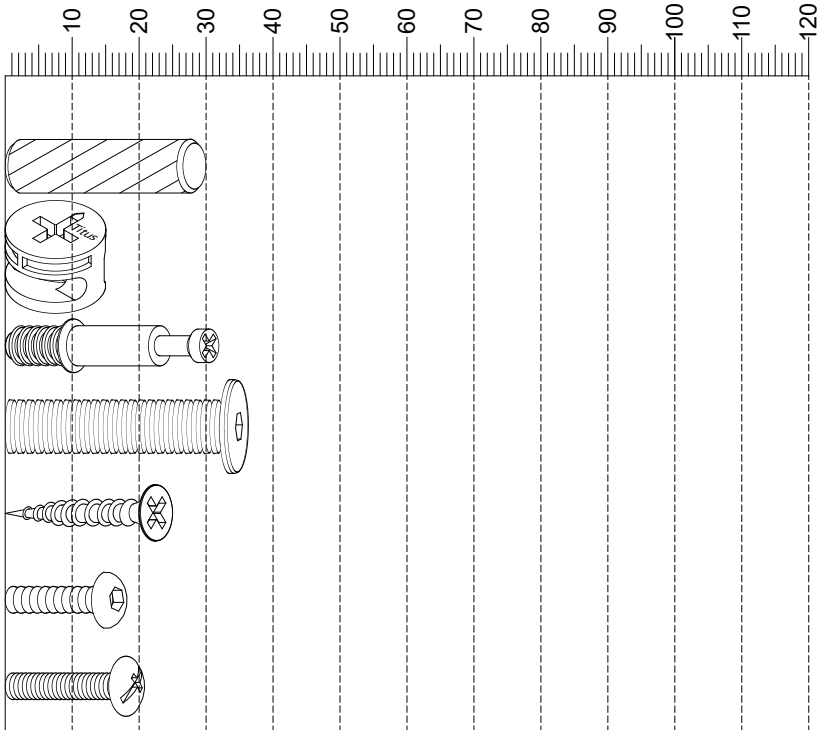

Fixtures and fittings supplied (not to scale)

Ref	Dimensions	Qty	Spare Qty	Visual
T1	N/A	2	N/A	
T5	N/A	2	N/A	
M34	N/A	4	N/A	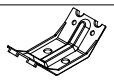
P19	N/A	2	N/A	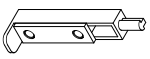
Q3	N/A	8	1	

NEXT

HAYFORD CONSOLE TO DINING TABLE

AV2337

Assembly instructions

1

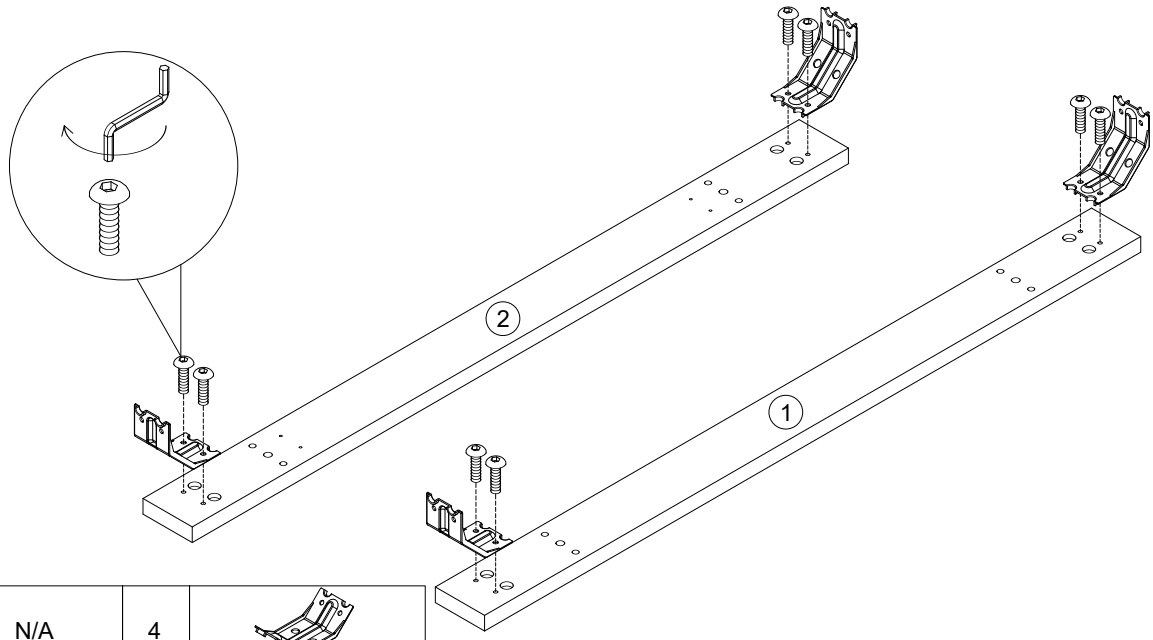

M34	N/A	4	
T1	N/A	2	
S59	Ø6 x16mm	8	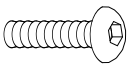

2

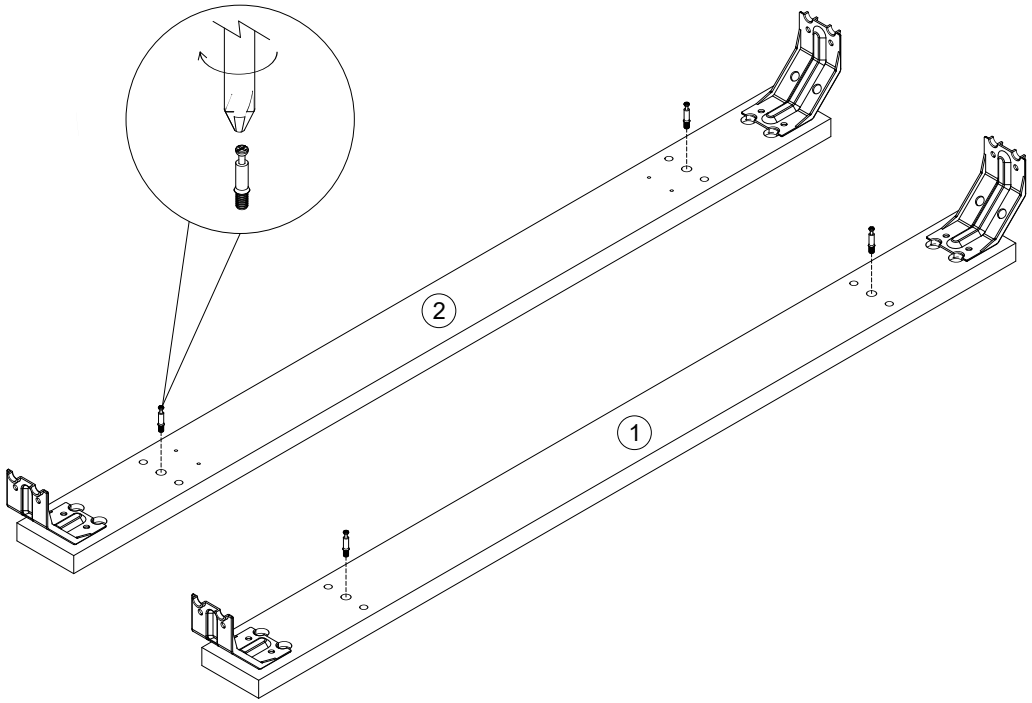

B12	Ø7.5 x 33mm	4	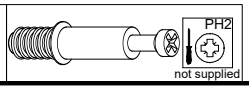

Produced in China for Next Retail Ltd.
AV2337-2025-V1.

NEXT

HAYFORD CONSOLE TO DINING TABLE

AV2337

Assembly instructions

3

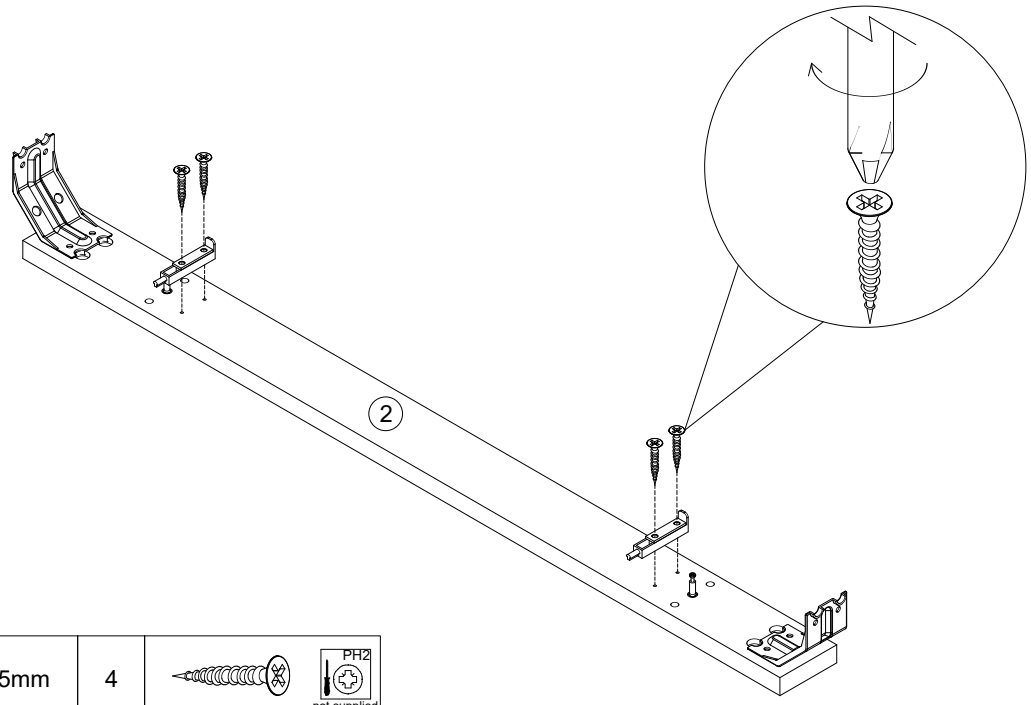

U151	Ø4 x 25mm	4	PH2 not supplied
P19	N/A	2	

4

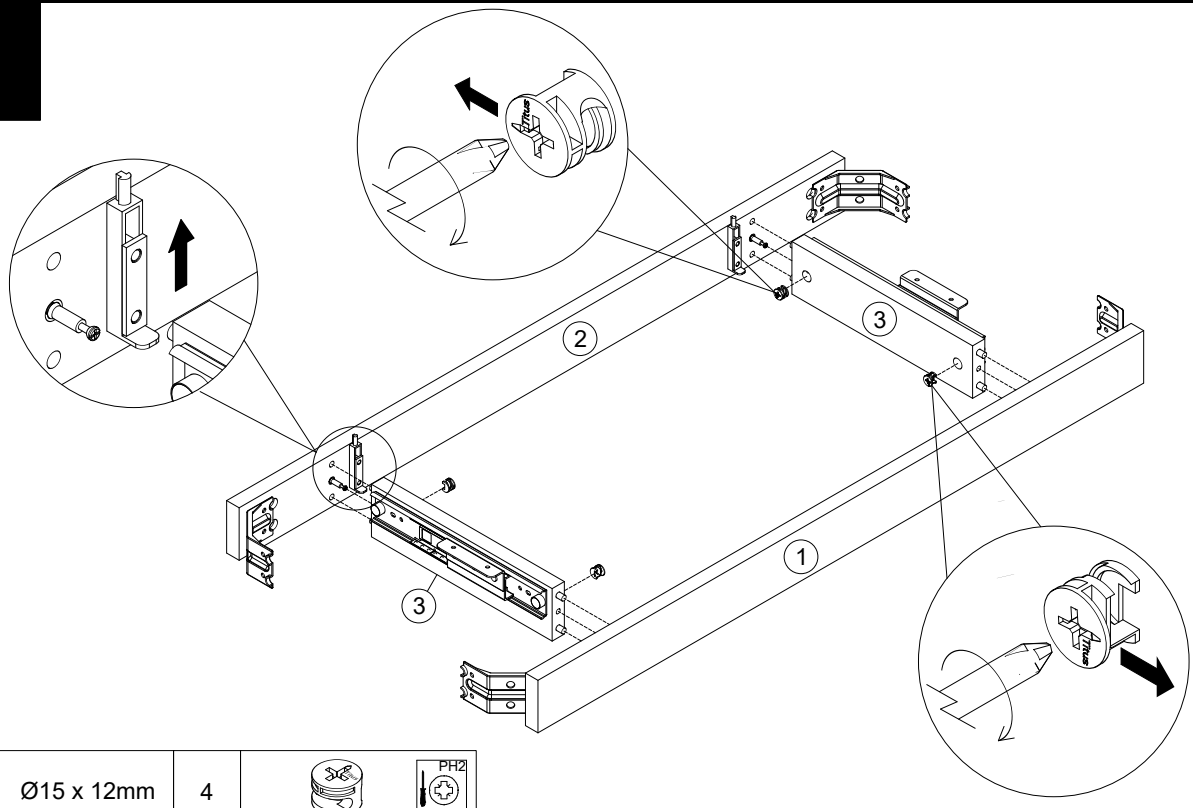

B3	Ø15 x 12mm	4	PH2 not supplied

NEXT

HAYFORD CONSOLE TO DINING TABLE

AV2337

Assembly instructions

5

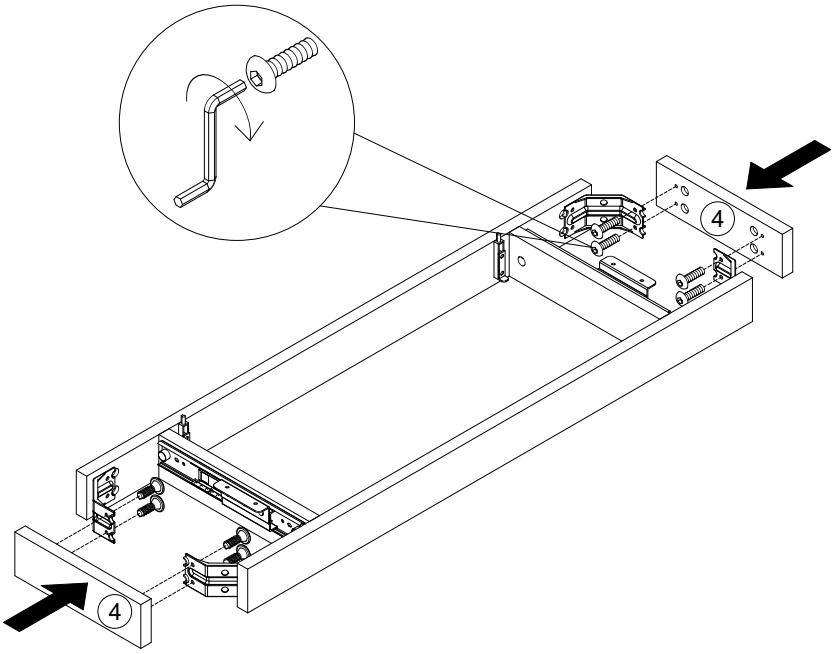

T1	N/A	2	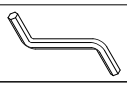
S59	Ø6 x16mm	8	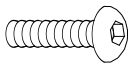

6

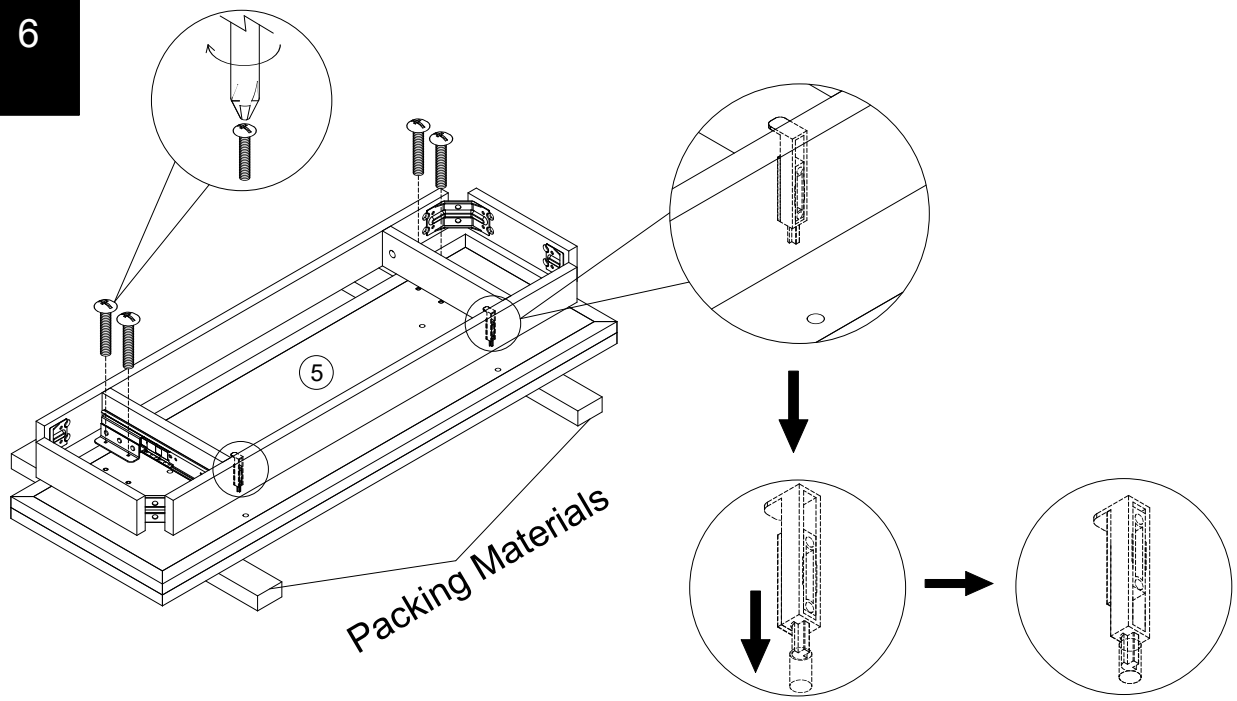

Z7	Ø4 x 16mm	4	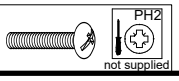 PH2 not supplied

HAYFORD CONSOLE TO DINING TABLE

AV2337

Assembly instructions

7

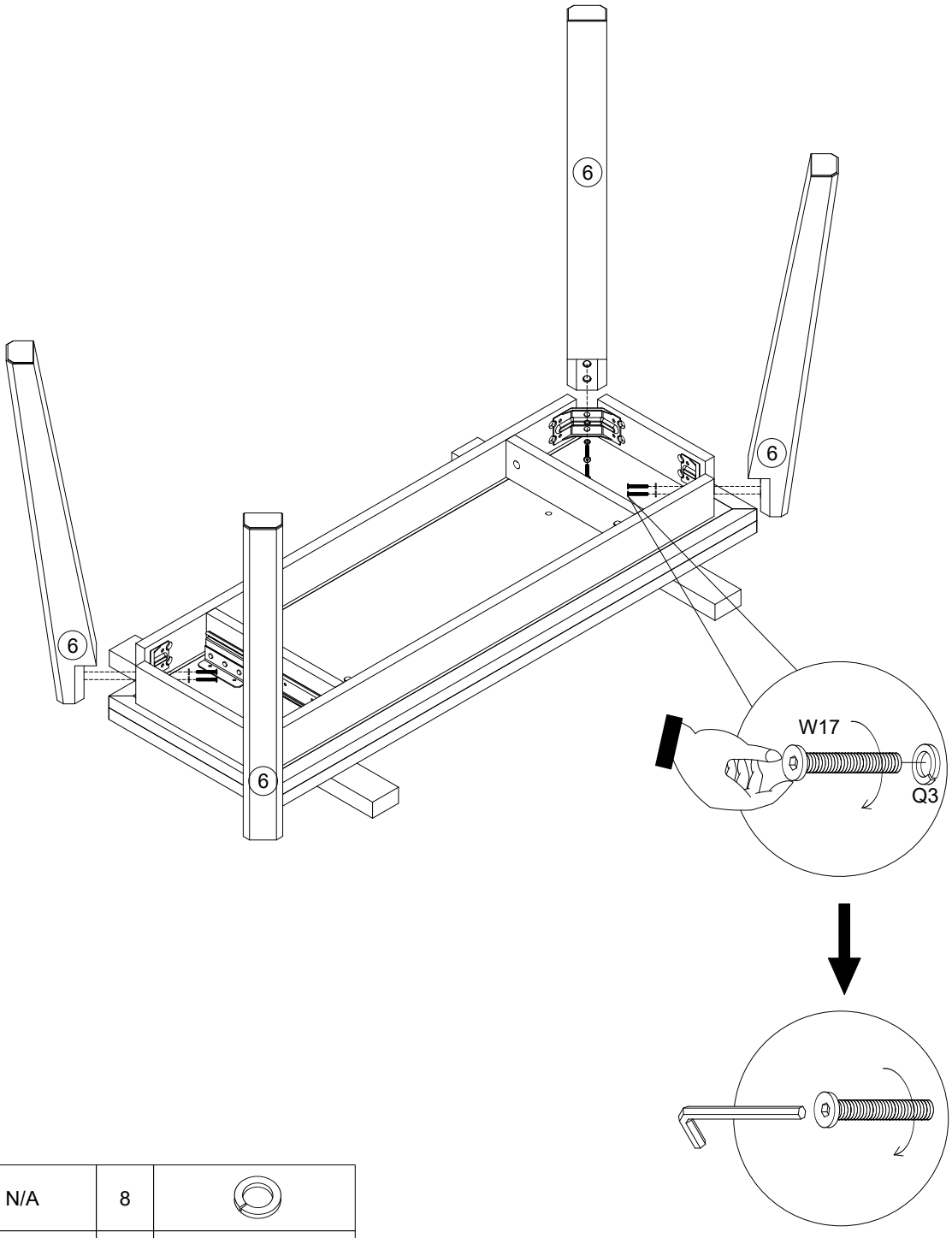

Q3	N/A	8	
T5	N/A	2	
W17	Ø8 x 35mm	8	

8

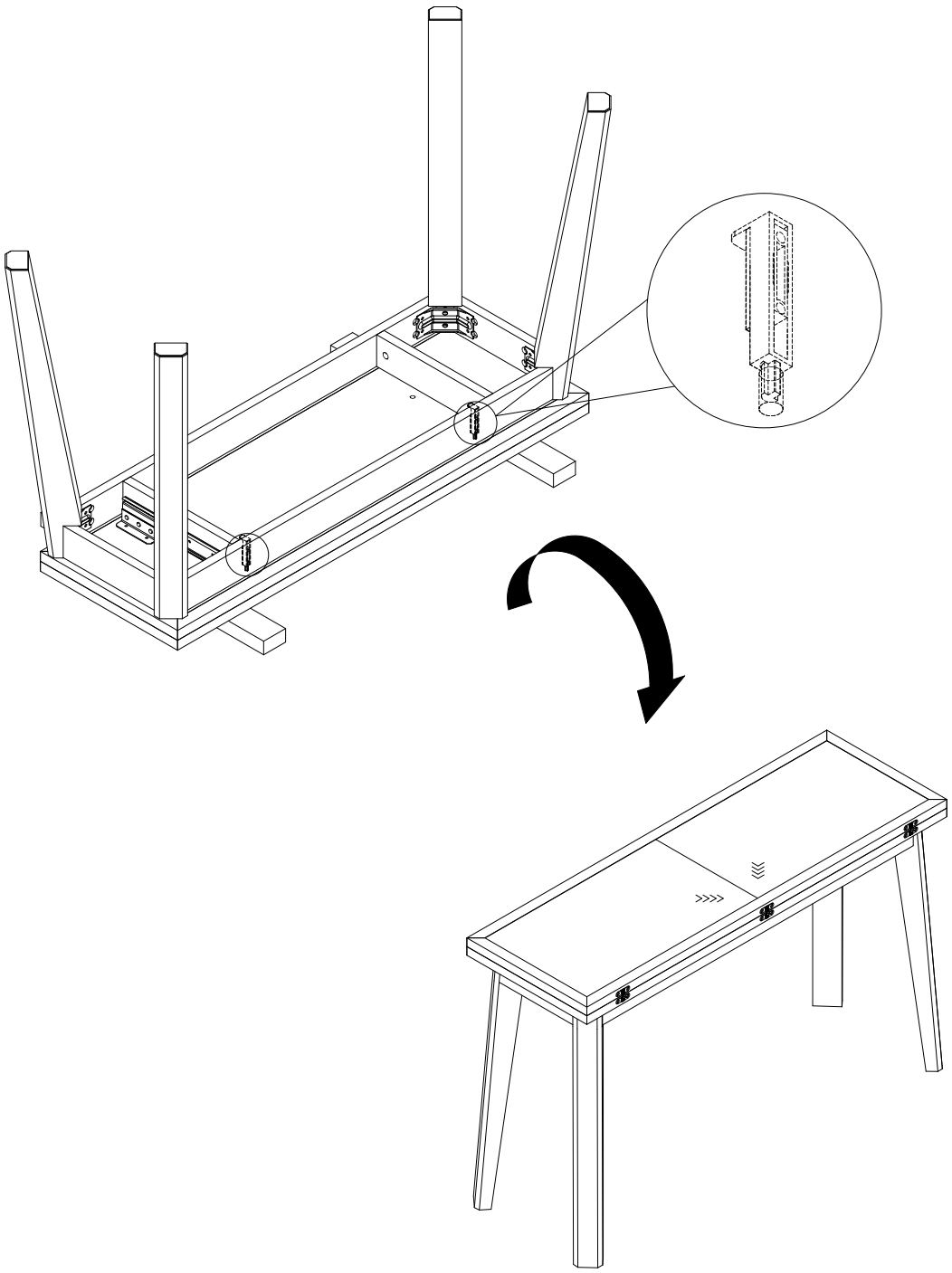

NEXT

HAYFORD CONSOLE TO DINING TABLE

AV2337

Assembly instructions

9

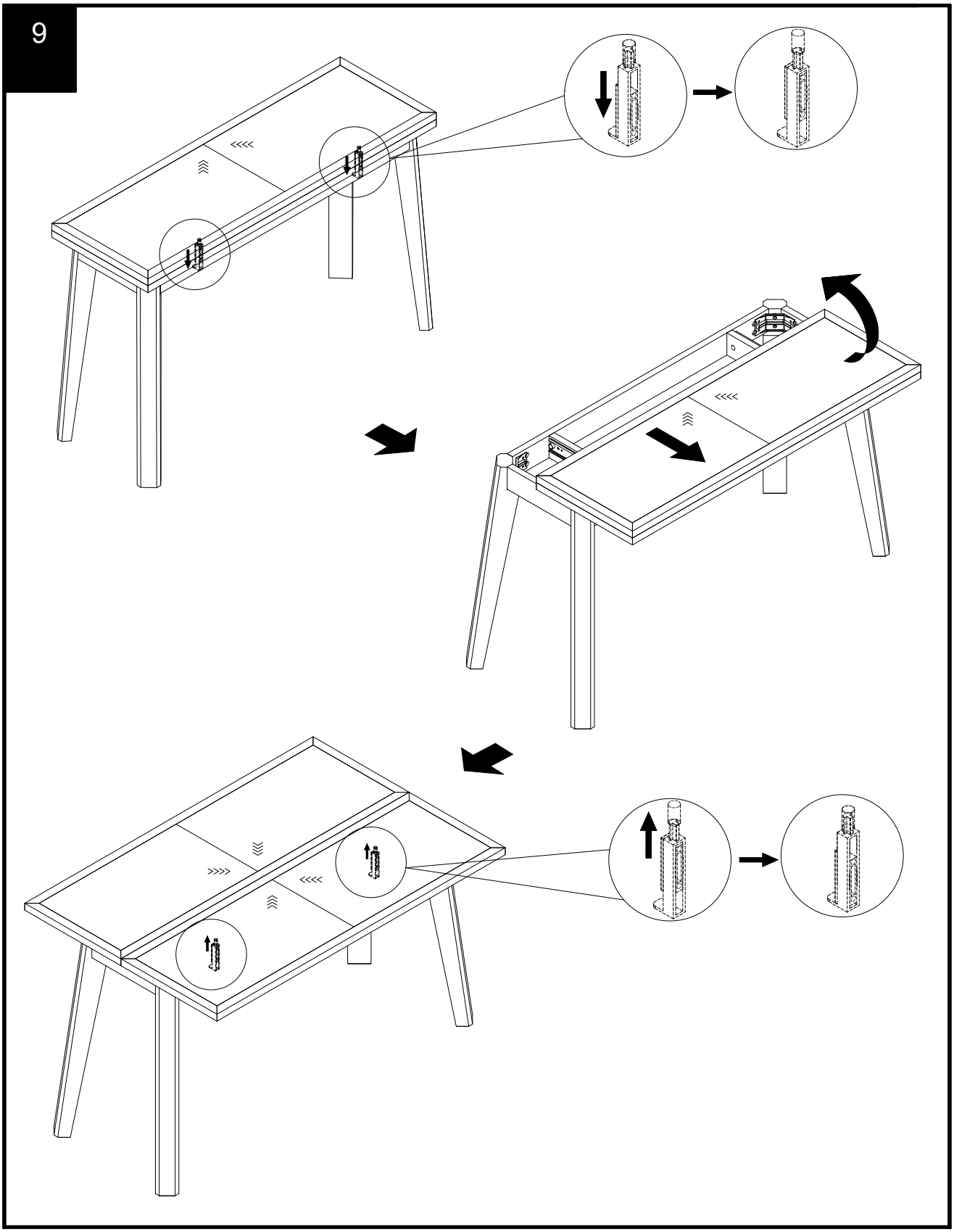

NEXT HAYFORD CONSOLE TO DINING TABLE
AV2337

Actual product size
H78x W120x D40cm
H75.5x W120x D80cm

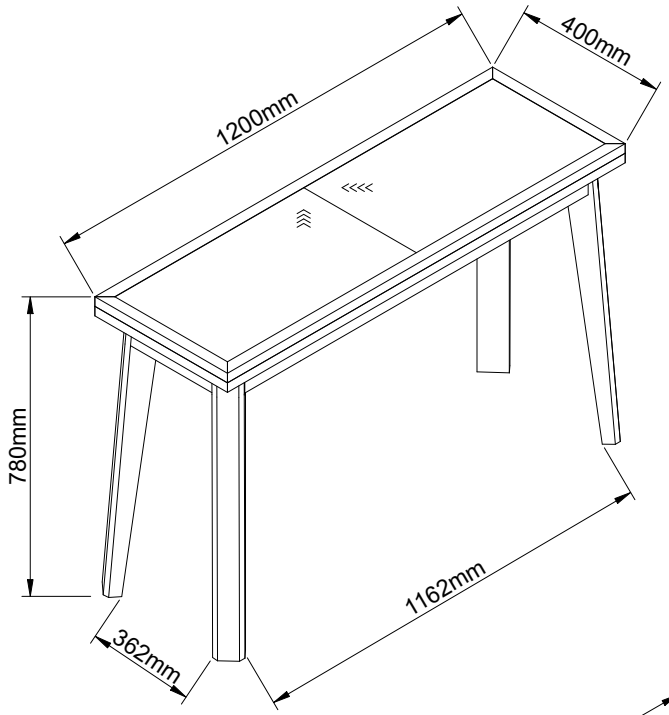

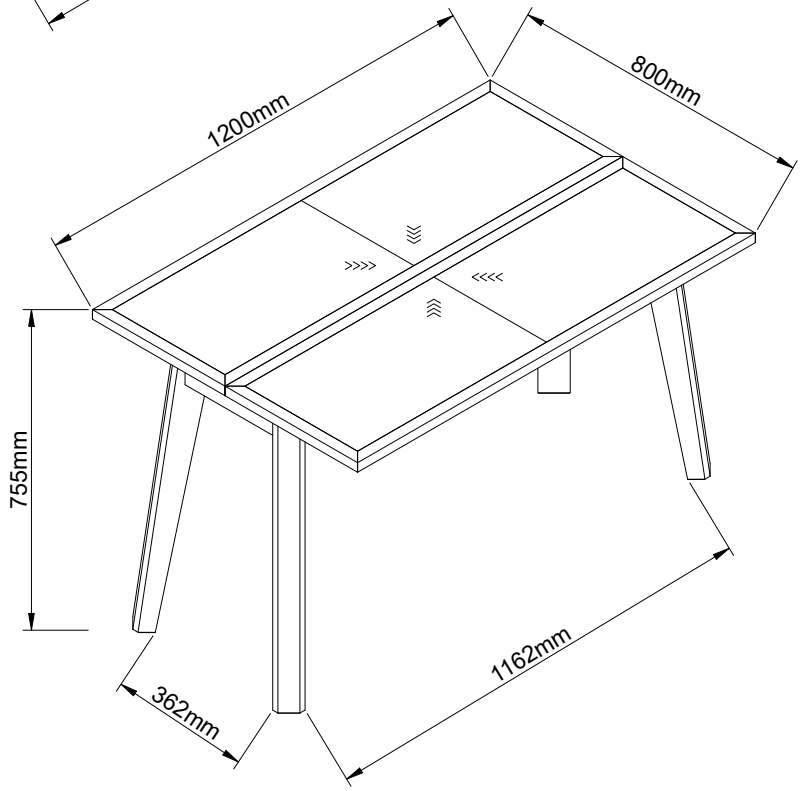

Produced in China for Next Retail Ltd.
AV2337-2025-V1.