BEFORE YOU GET STARTED...

We're confident you'll love your gorgeous new Next furniture. However, it's worth making absolutely certain before you put it all together.
So, let's quickly run through these three steps:

1. COLOUR

Make sure you're happy with the colour
No need to unpack everything, just check the first component.

2. PROTECTIVE PACKAGING

If you're happy, then it's time to get opening! Start by laying everything out on the protective packaging – this will prevent anything getting scratched.

3. PARTS PAGE

Finally, double check you have all the pieces by referencing the parts page of the instructions.

TIPS FOR RETURNS

Not completely happy with the product? No problem.
We just need everything back in the original packaging, so follow the steps below and this will ensure a super-smooth returns process and no delay to your refund.

DO

- Check everything is there (the 'parts page' is a handy checklist).
- Pop all the loose fittings and fixtures into the packaging provided or tie them up in a plastic bag.
- Wrap all the big components back up in the original protective packaging.
- Close up the box and seal it securely (don't be afraid to use plenty of tape).

DON'T

- Leave anything assembled - all components should be dismantled and separately packed.
- Put loose fixtures and fittings straight into the box.
- Throw it back in the box carelessly – as it may get damaged.

next HOME

Then just give us a call on 0333 777 8999 and we'll sort out a pick up time for you.

NEXT

Grayson Bed with Recliner

Assembly instructions

Actual product size

King: H130 x W182 x L220
SuperKing: H130 x W212 x L220

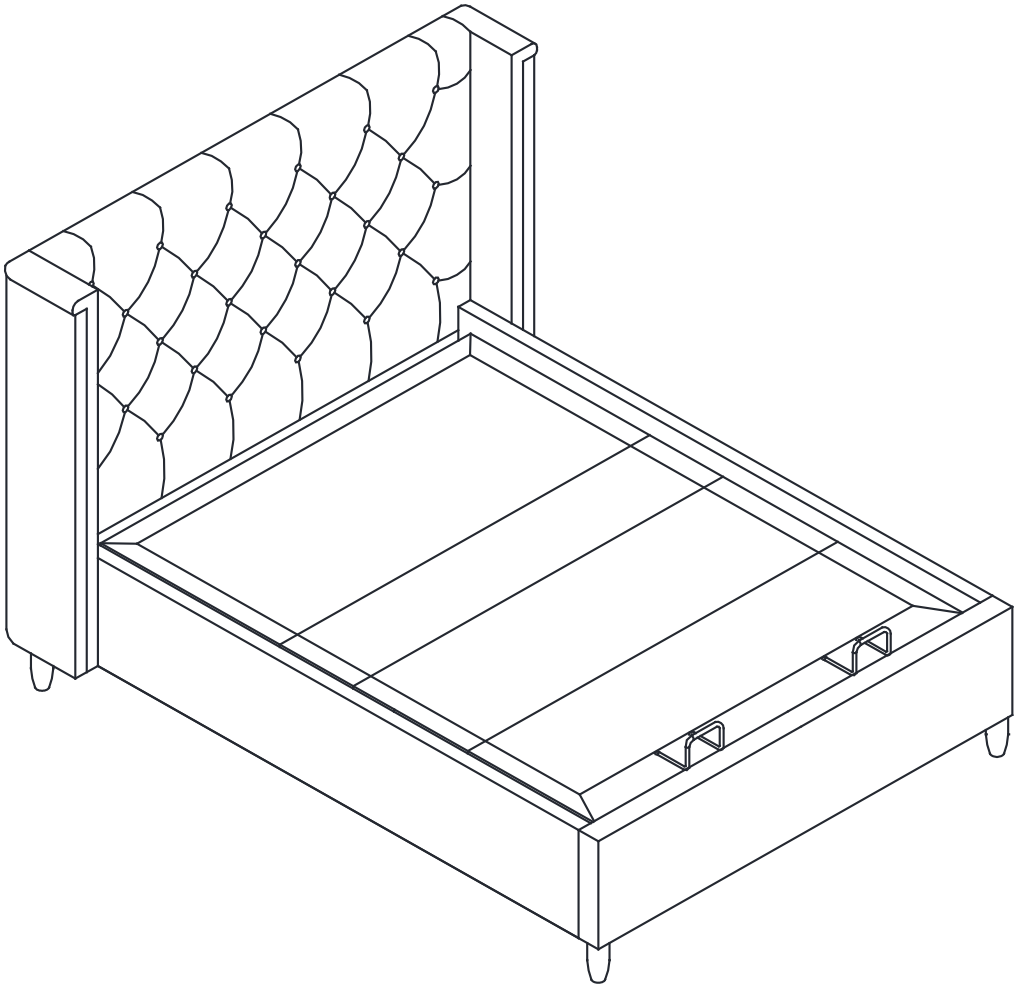

Item number	Fabric name	Fabric composition
B77854	Wool Blend Stone	50% Wool / 30% Viscose / 20% Polyester

Need Help?

With: Assembly instructions
Missing or damaged parts

IMPORTANT – RETAIN FOR FUTURE REFERENCE

CALL: 0333 777 8999

Produced in China for Next Retail Ltd.
2024-V1

NEXT

Grayson Bed with Recliner

Assembly instructions

BEFORE YOU START

Warnings

We suggest you retain these instructions for future reference.
Keep fittings out of children's reach and keep children well away from construction area.
This product should only be used on firm, level ground
Please periodically check all fittings and re-tighten as necessary.
Please do not jump or stand on your bed.
Avoid exposing the furniture to excessive heat or direct sunlight as this can cause cracking of the wood and deterioration of the colour.
Keep away from strong heat sources.
Do not use this item if components are missing or broken
Keep fingers away from moving parts to avoid any possible injury.

Do's

We suggest you spend a short time reading through this leaflet before you start .
When you are ready to start, make sure that you have the right tools and plenty of space .
Due to the size of the product we recommend that it is assembled in the room intended for use.
Unwrap all packaging materials and place the components on a clean surface to protect it from damage, We recommend that the packaging is used to protect the surfaces during assembly .
Carefully check that you have all the parts before beginning assembly
Ensure the product is fully assembled as illustrated and all fixings fully tightened before use.
Check fixings regularly to ensure they remain tight .
When adjusting the support legs, ensure that the foot is set 10mm from the floor surface without the mattress in place. When in use the legs will create the required support.
Always ensure that protectors are used on the legs according to your flooring type.
Ensure that the bed is assembled as per the instructions, all fittings are tightened and slats are secure before placing your mattress.
To clean your items, please lightly wipe with a slightly dampened cloth
For leather items dust regularly with a soft cloth, preferably once a week, to keep the leather pores free from dust particles
For velvet items use a soft brush lightly dress the fabric. Lightly wipe with a slightly dampened cloth to clean.
For velvet items avoid scratching the fabric as the pile may not recover and permanently mark it.

Don'ts

Do not drag your assembled bed. Always lift the bed and check that the centre support rail is securely fixed in place.
Apply Adhesive substrates for example, sticky tape to the product
Do not use silicone based furniture polish. Silicone in furniture polishes can break down the lacquer finish
Never allow any kind of liquid to remain on your furniture. Absorption can cause finishes to de-laminate and or stain
Please do not jump or stand on your bed

Number of people required to assemble

We recommend two people assemble this product.

Time to assemble

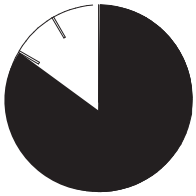

50 min.

Missing parts

If you are missing any fixtures and fittings for your product please contact our customer service team on **0333 777 8999** and they will be happy to arrange for a replacement to be sent to you free of charge.

Home service technicians

If you have a fault with your product please contact our customer service team on 0333 777 8999. If you have had the product for 28 days or less you may be offered a replacement, refund or for a fully trained home service technician to visit your home to assess the fault and repair the product where possible. If you have had the product for more than 28 days we will send an independant home service technician to review and repair the product where possible and recommend further action.

You can write to us at

Home Customer Services
Next Retail Ltd,
Desford Road,
Leicester ,
LE19 4 AT

To view our full furniture range please visit www.next.co.uk

Produced in China for Next Retail Ltd.
2024-V1

NEXT

Grayson Bed with Recliner

Assembly instructions

GETTING TO KNOW YOUR PRODUCT

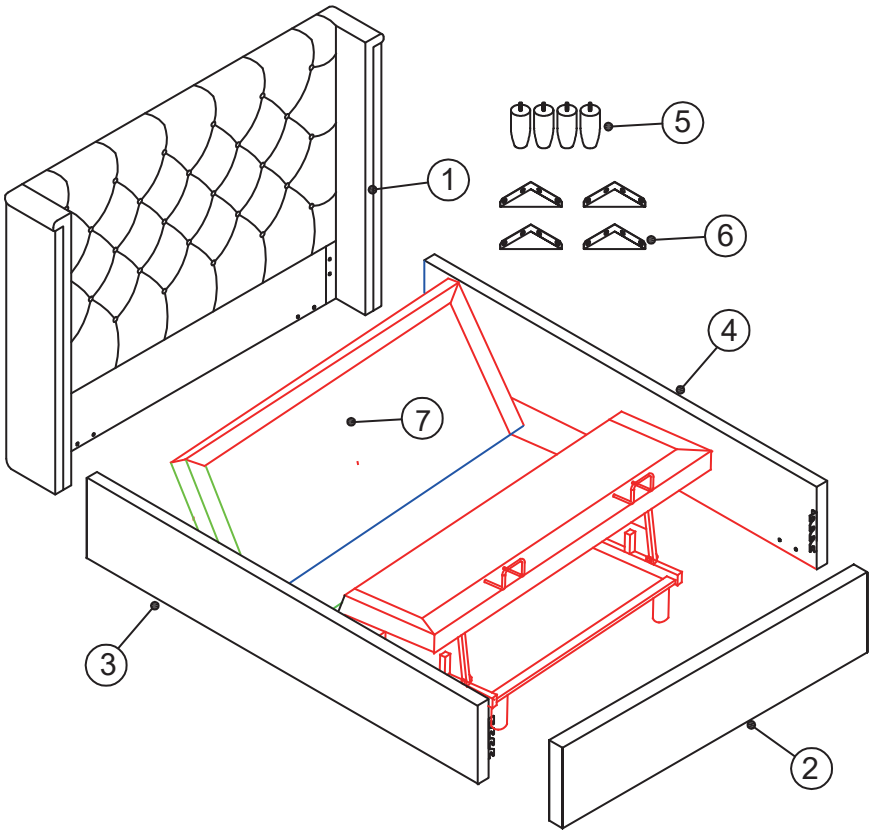

Components supplied. Please use this guide if you require replacement parts.

Ref	Dimension	Visual	Qty
1	King:181x118cm Super King:211x118cm	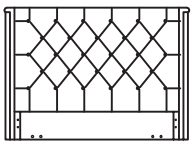	1
2	King:162x20cm Super King:192x20cm		1
3	King:202x20cm Super King:202x20cm	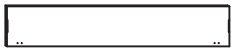	1

Ref	Dimension	Visual	Qty
4	King:202x20cm Super King:202x20cm	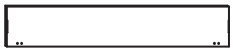	1
5	12 x 6cm		4
6	17 x 4 cm		4
7	King:200x150x32cm Super king: 200x180cm	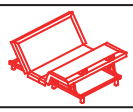	1

NEXT

Grayson Bed with Recliner

Assembly instructions

Fixtures and fittings supplied (actual size)

Ref	Dimension	Qty	Spare
A	8 x 25mm	24	2
B	6 x 40mm	4	N/A
C	8 x 13mm	24	2
D	6 x 11mm	4	N/A
E	4 x 60mm	1	N/A
F	5 x 60mm	1	N/A
G	3 x 40mm	4	N/A

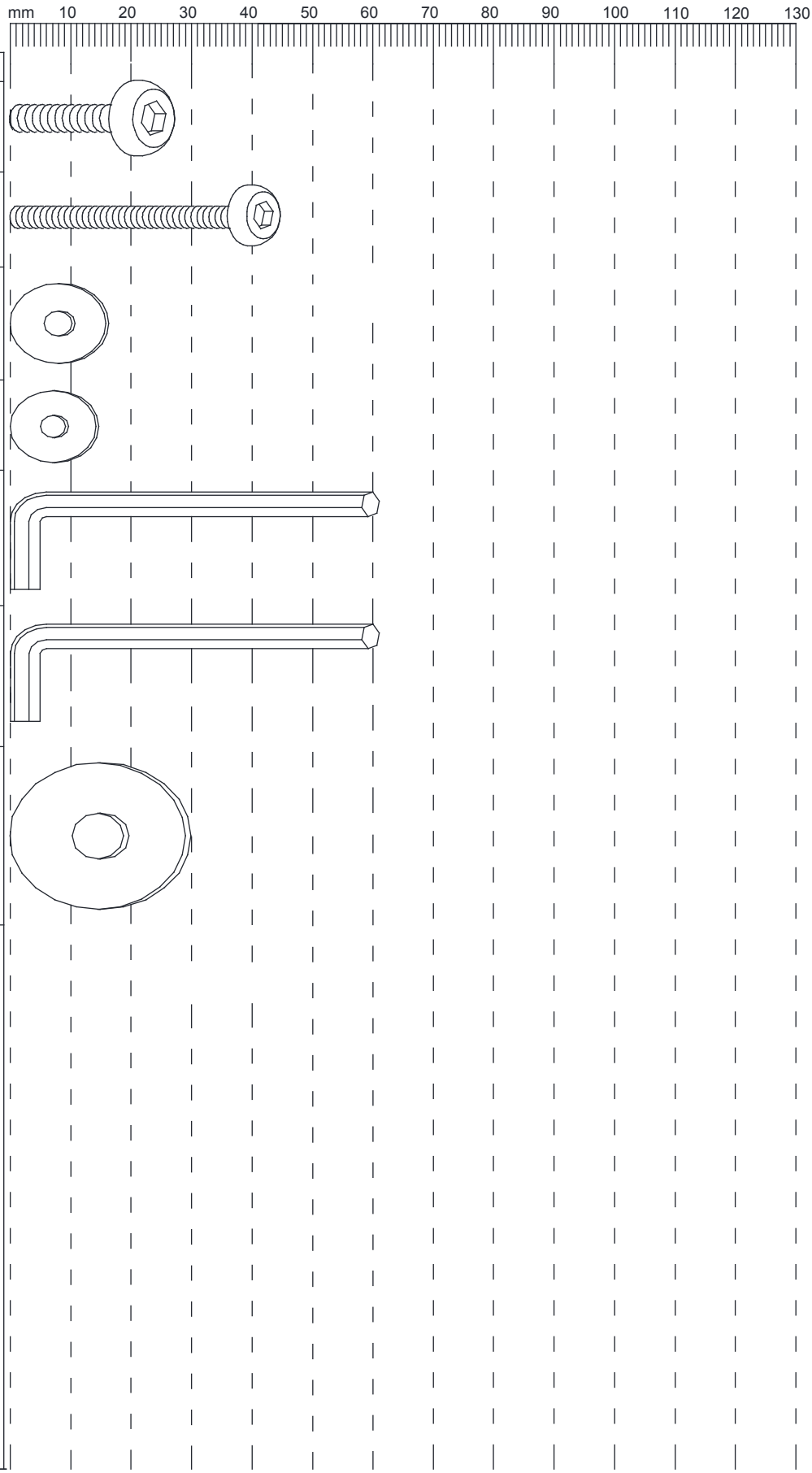

NOTE:

1. PLEASE ASSEMBLE RECLINER BY OWNER'S MANUAL

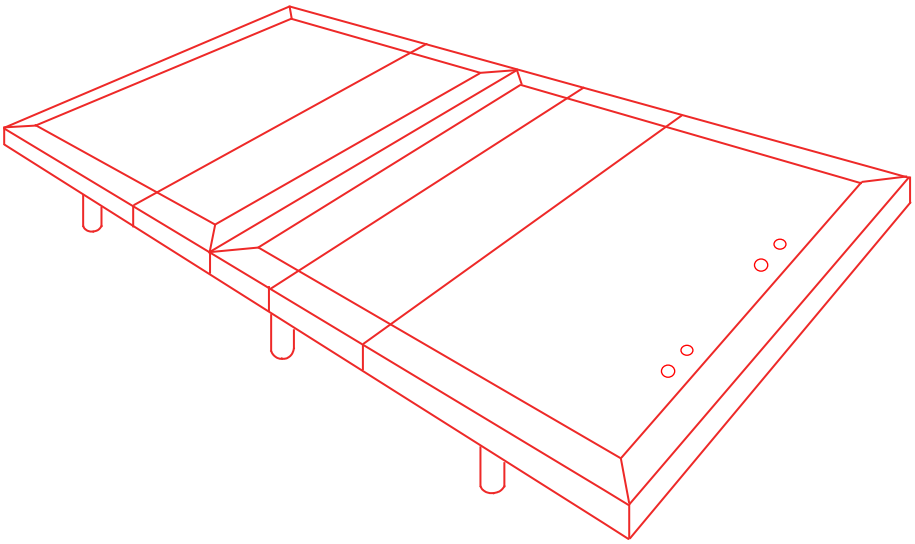

2. ADJUST THE RECLINER TO BLOW POSITION

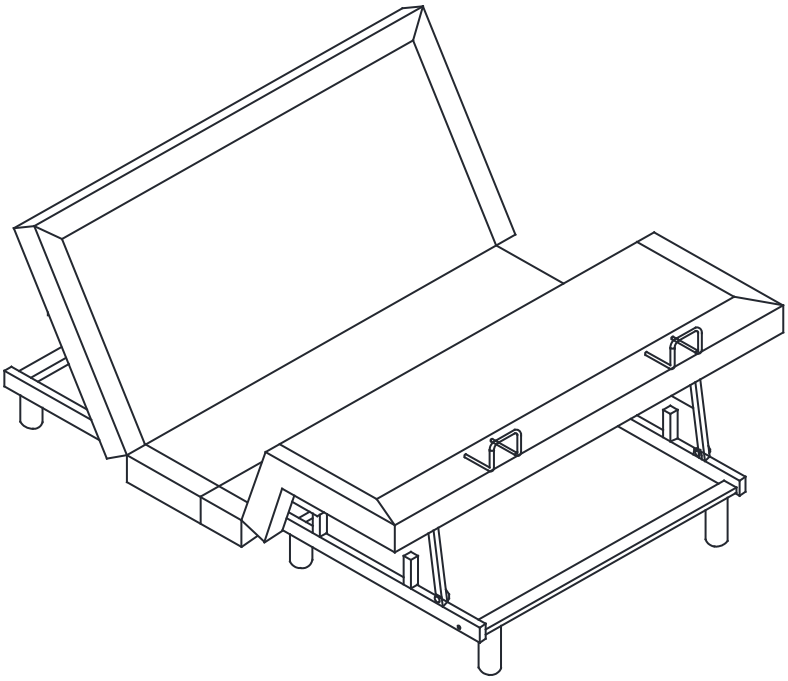

NEXT

Grayson Bed with Recliner

Assembly instructions

1

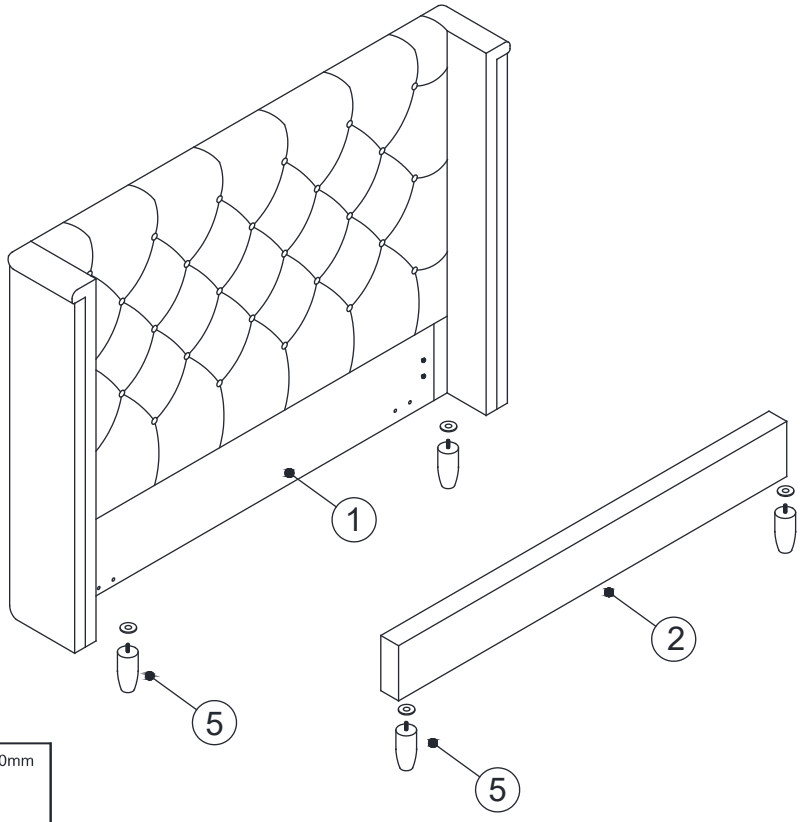

G x 4 3 x 40mm

2

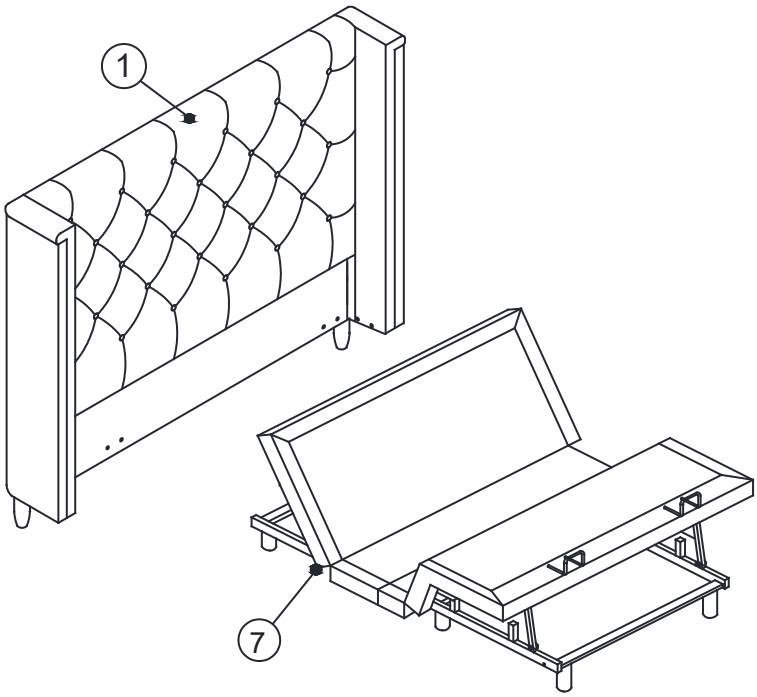

NEXT

Grayson Bed with Recliner

Assembly instructions

3

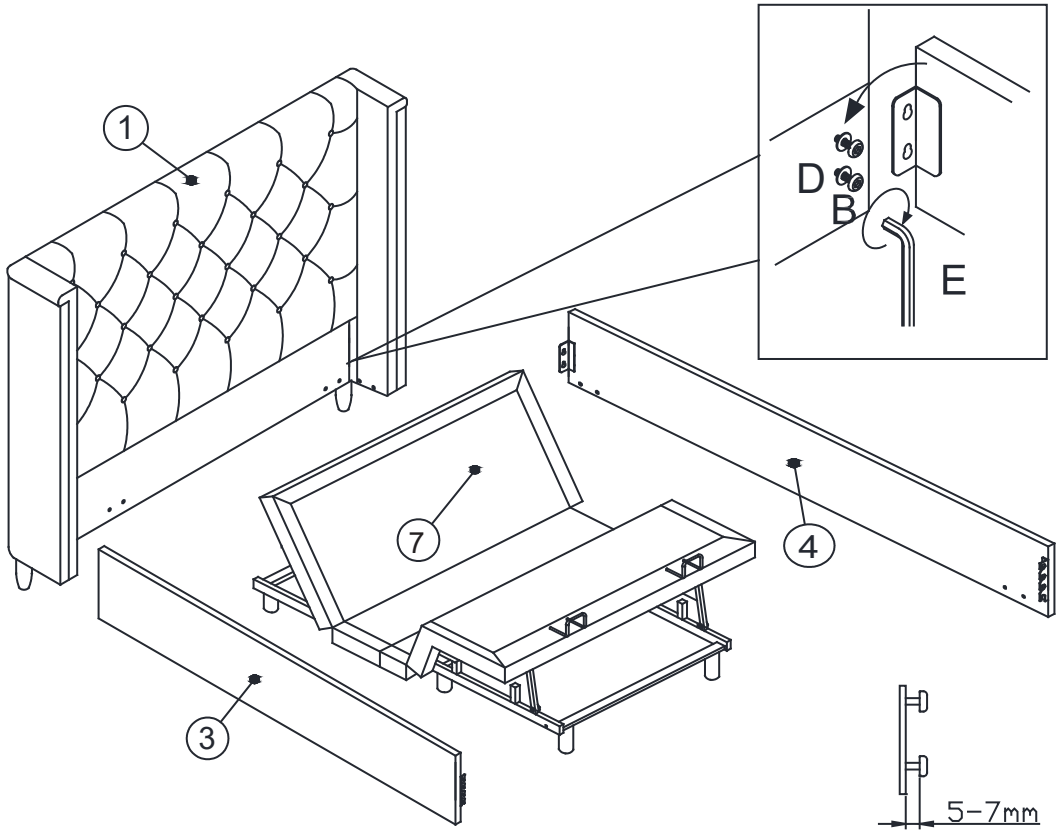

B x 4	6 x 40mm
D x 4	6 x 11mm
E x 1	4 x 60mm

4

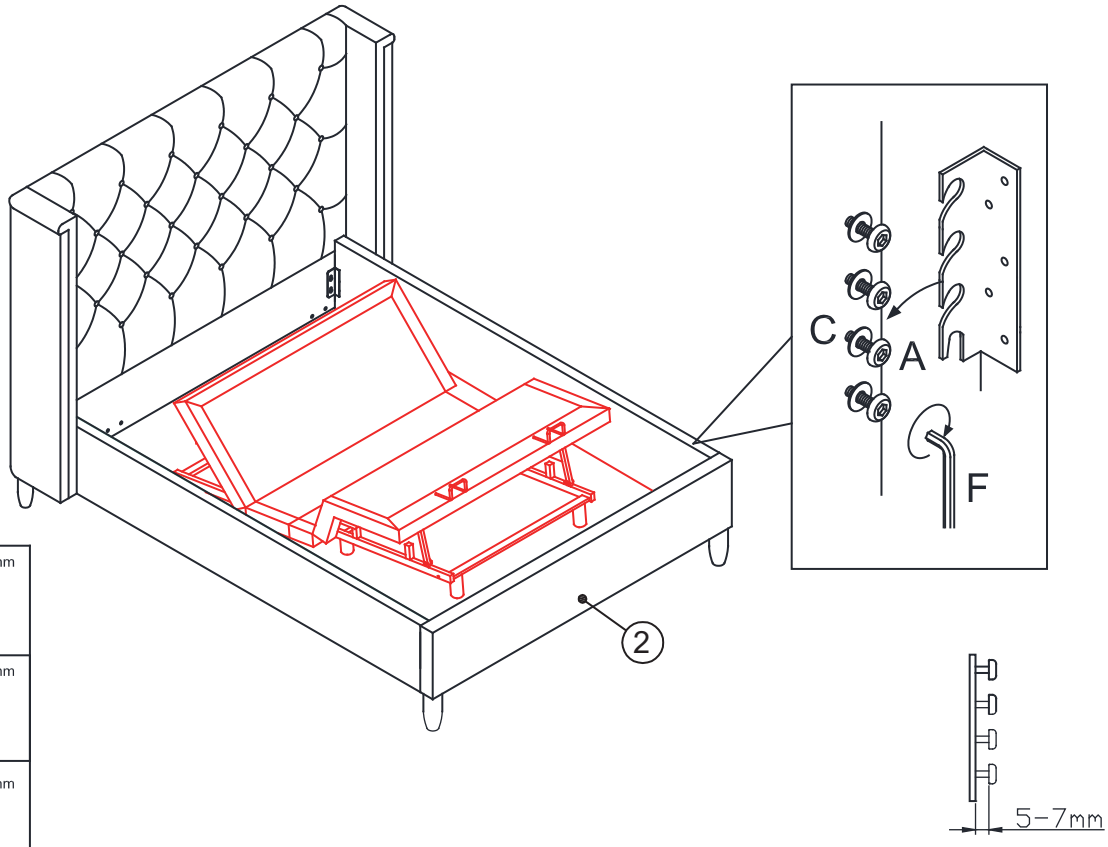

A x 8	8 x 25mm
C x 8	8 x 13mm
F x 1	5 x 60mm

5

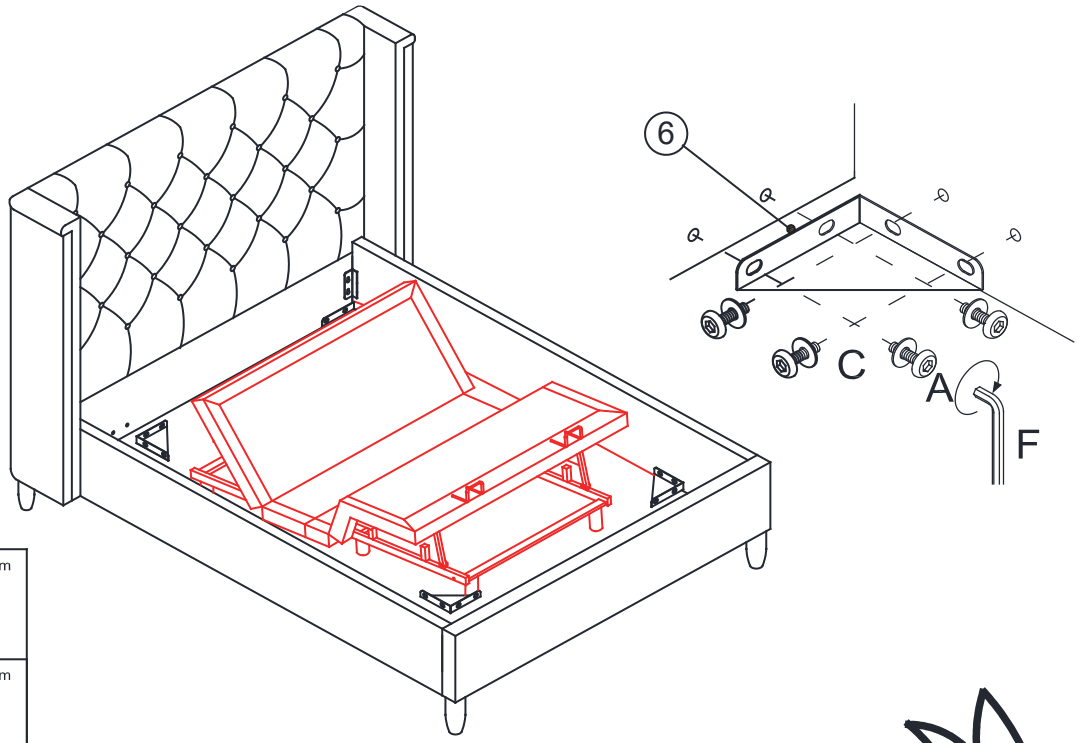

A x 16	8 x 25mm
C x 16	8 x 13mm
F x 1	5 x 60mm

6

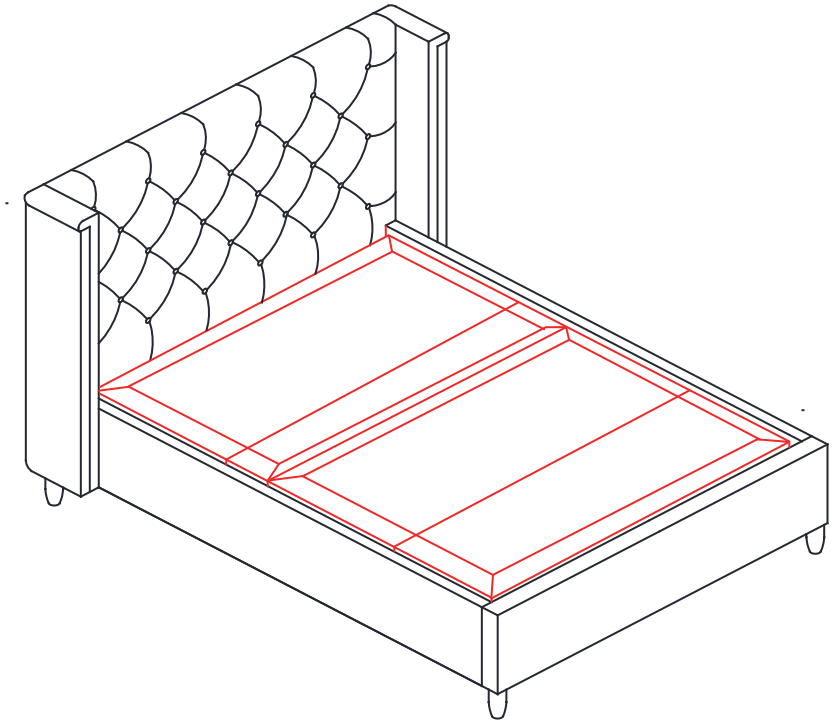

Inernal size for mattress
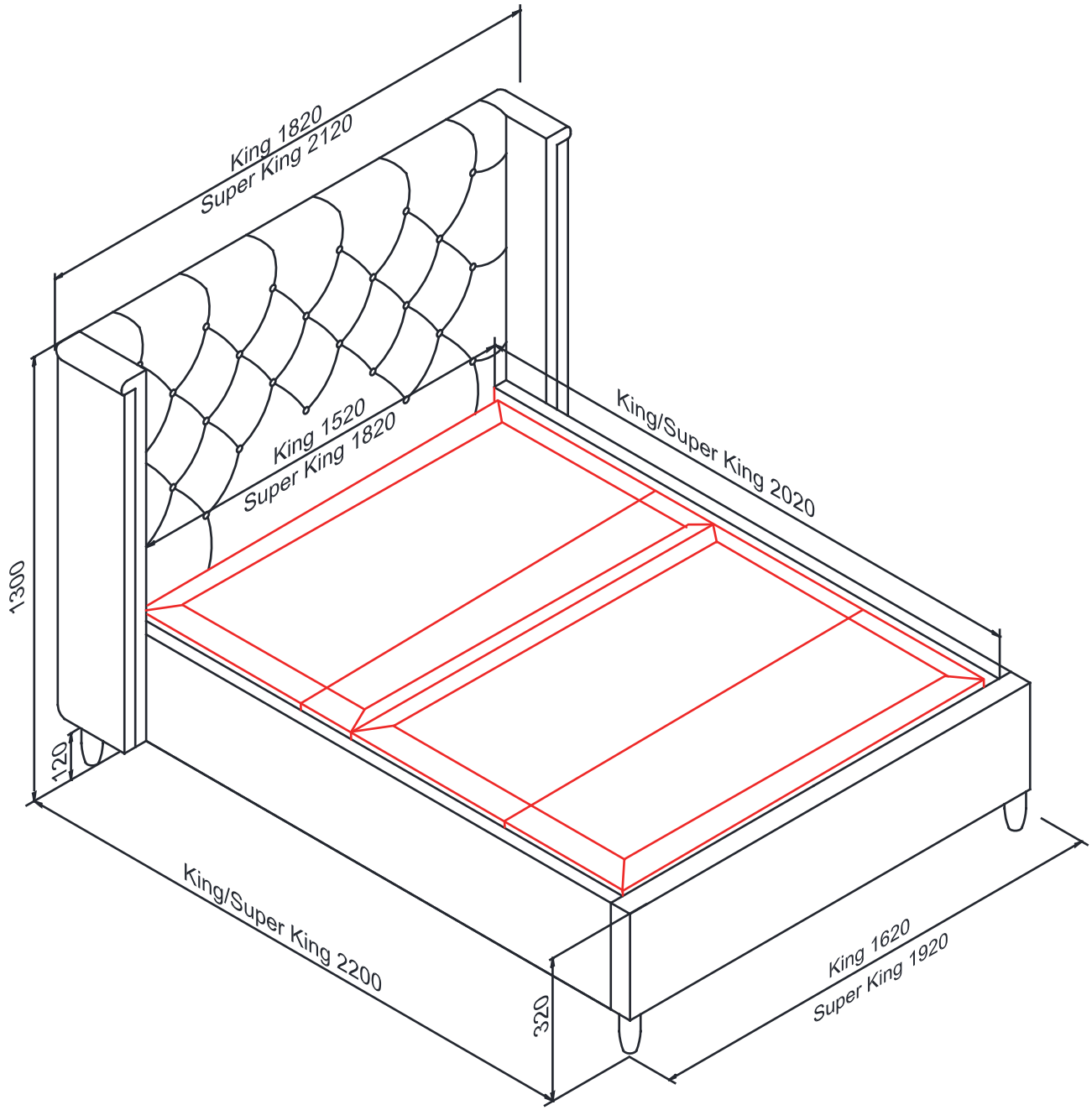
King: 200 x 150cm
Super King: 200 x 180cm