Someford

DRESSING TABLE WITH MIRROR

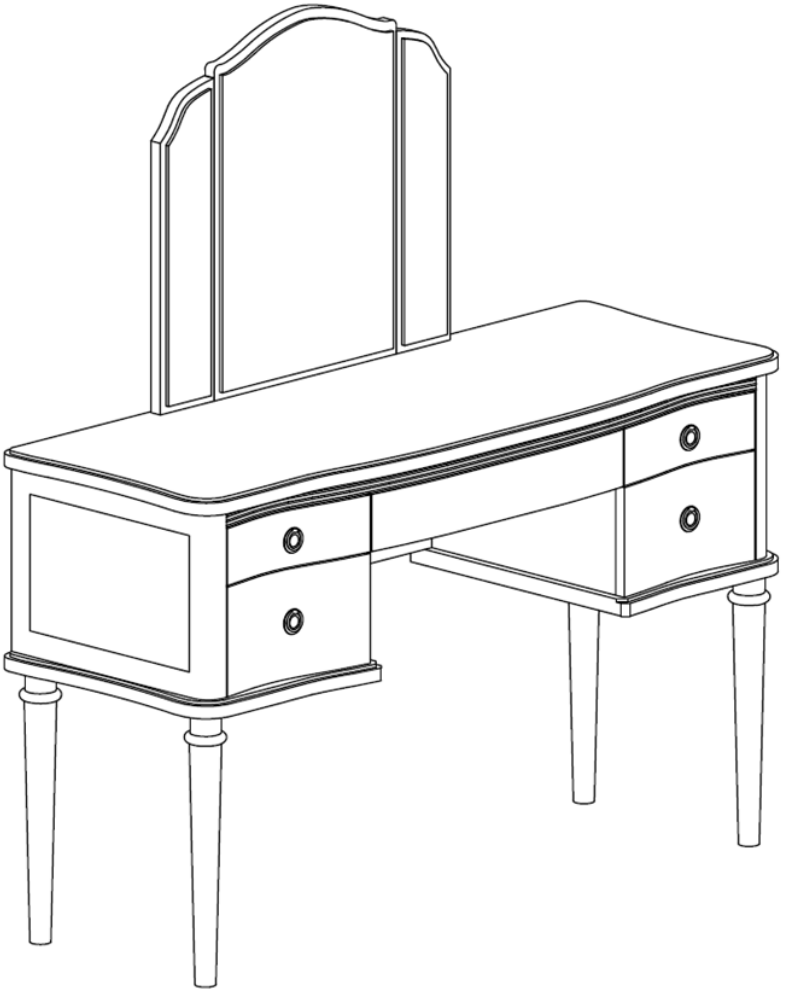

LAURA ASHLEY

SINCE 1953

lauraashley.com

Manufactured under licence by NEXT plc.

BEFORE YOU START

Do

- We suggest you spend a short time reading through this leaflet before you start.
- When you are ready to start, make sure that you have the right tools and plenty of space.
- Unwrap all packaging materials and place the components on a clean surface to protect it from damage.
- We recommend that the packaging is used to protect the surfaces during assembly.
- Carefully check that you have all the parts before beginning assembly.
- Due to the size of the product we recommend that it is assembled in the room intended for use.
- Ensure the product is fully assembled as illustrated and all fixings fully tightened before use.
- Wipe occasionally with a soft cloth slightly dampened with water. Then buff with a dry clean soft cloth.
- Wood will mellow and change colour over time, we recommend that ornaments and items placed on the surface are moved regularly for the first few months to prevent uneven mellowing.

Do Not

- Do not drag or pull your furniture.
- Do not use silicone based furniture polish. Silicone in furniture polishes can break down the finish.
- Never allow any kind of liquid to remain on your furniture. Absorption can cause wood to warp or finishes to delaminate.
- Do not place hot items (e.g. hot drinks) directly on to the wood surface.
- Please make sure you use a placement or coaster.

Warnings

- We suggest you retain these instructions for future reference.
- Keep fittings out of children's reach and keep children well away from the construction area.
- This product should only be used on firm, level ground.
- Please periodically check all fittings and re-tighten as necessary.
- Please do not sit or stand on your furniture.
- Avoid exposing the furniture to excessive heat or direct sunlight as this can cause deterioration of the colour.
- Unwrap all packaging materials and place the components on top of the carton box or on a clean floor to protect it from damage.

PARTS LIST

Fixtures and Fittings Supplied				
Ref	**Dimensions**	**Qty.**	**Spare Qty.**	**Image**
H1	M6 x 30mm	8	1	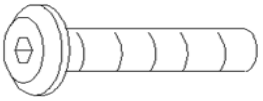

FITTINGS LIST

Fixtures and Fittings Supplier (Not To Scale)			
Ref	**Qty.**	**Spare Qty.**	**Image**
H2	1	N/A	

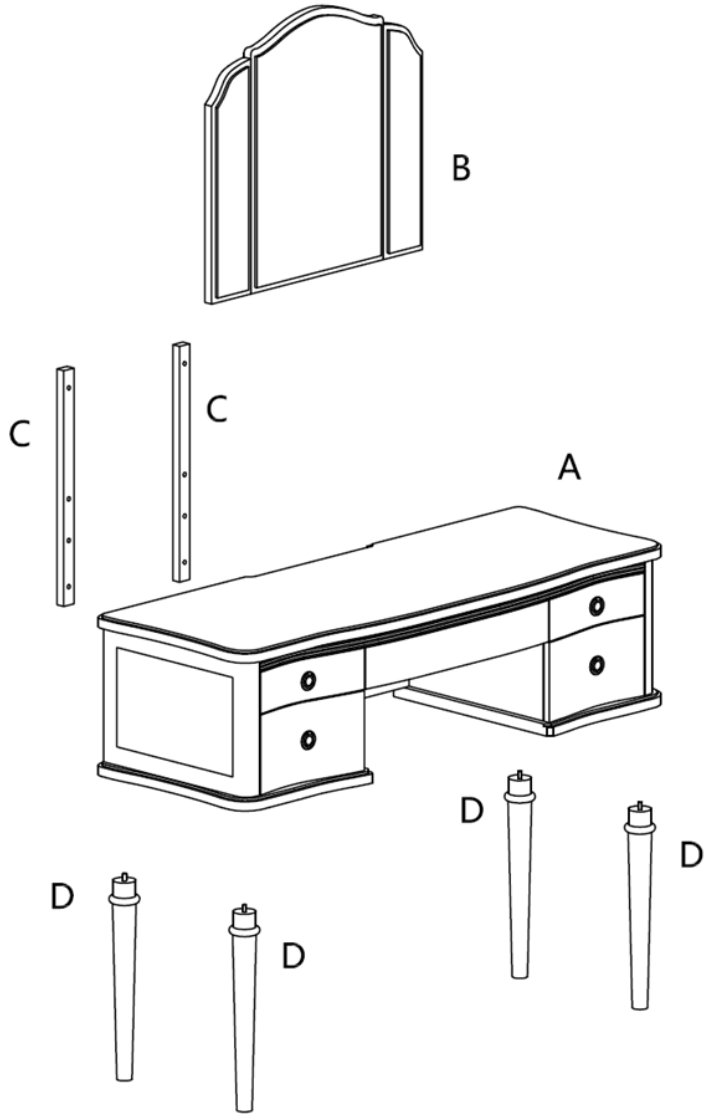

1

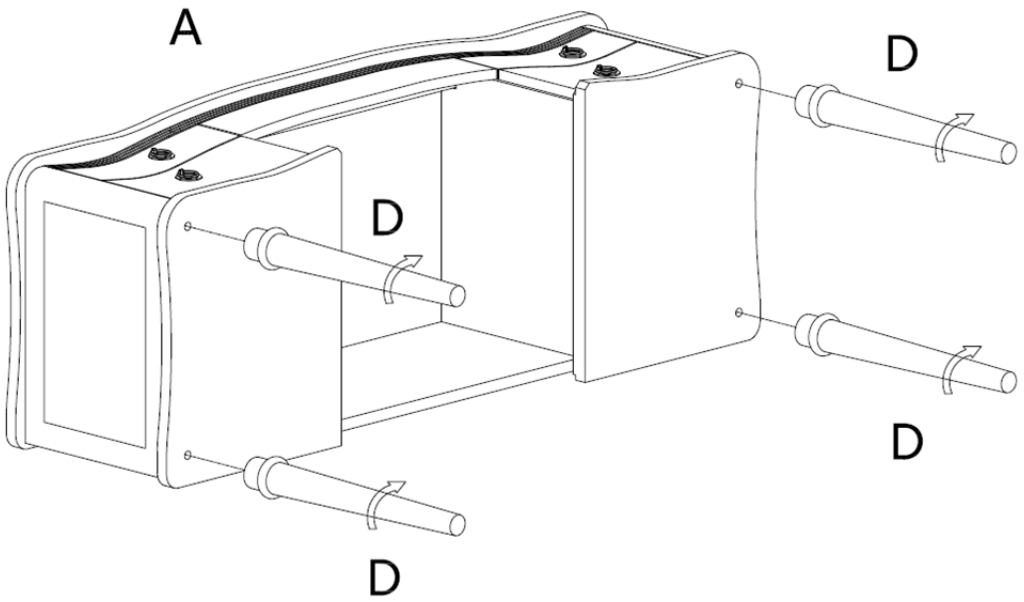

2

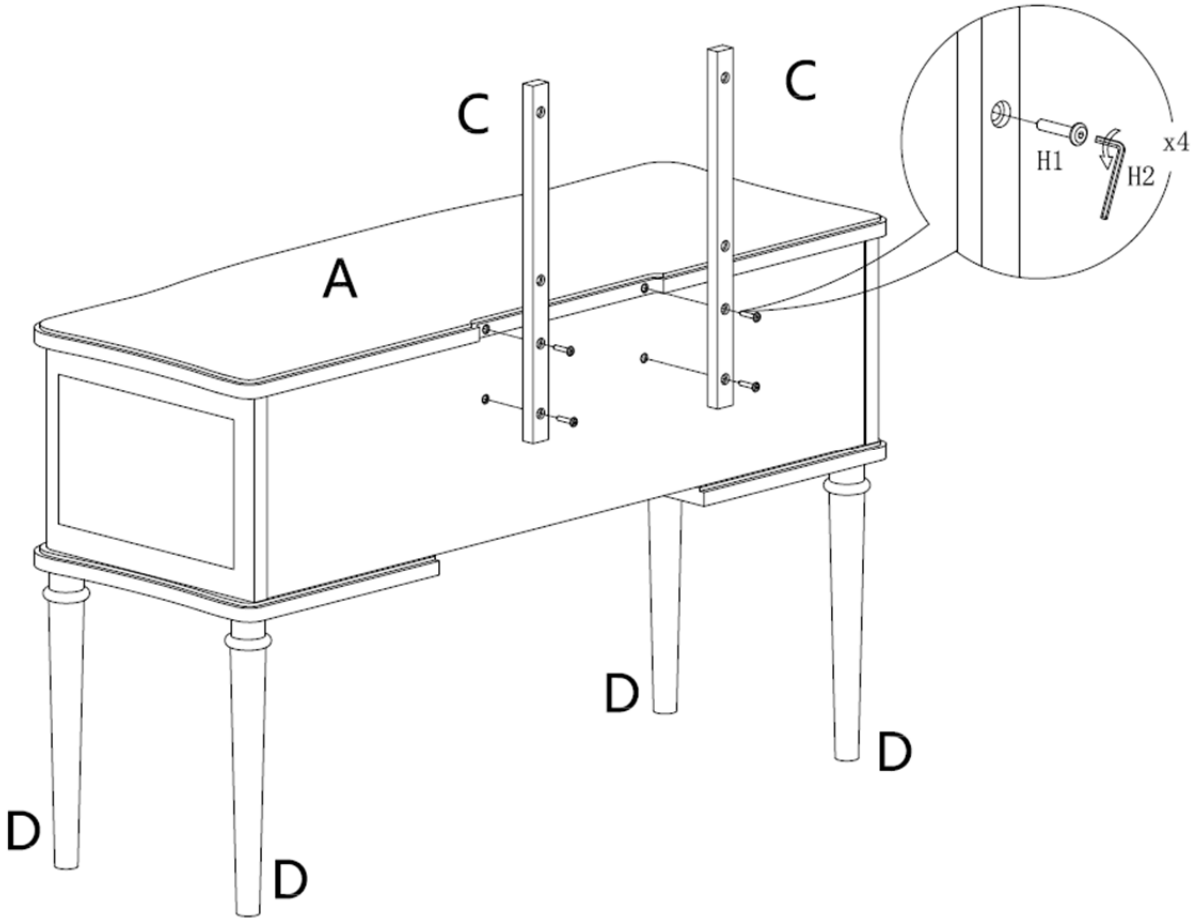

3

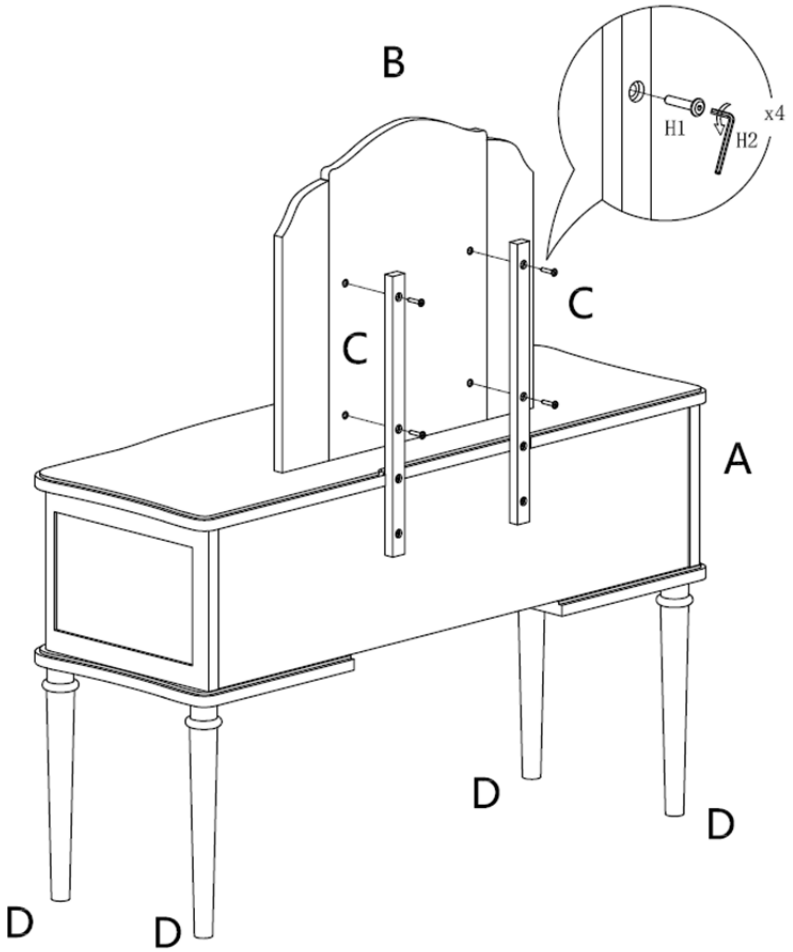

WARNING
WALL STRAP INFORMATION

- We recommend the use of the wall attachment bracket/strap provided for safety reasons.
- Installation shall be carried out exactly according to the manufacturer's instructions.
- The wall strap is only intended to be used with the product that it is supplied with.
- Never attempt to modify or change the wall attachment strap in any way.
- Never use any other fittings for attaching the strap to your furniture than those supplied.
- Secure the other end of the strap to the wall with an appropriate screw and wall plug for your wall type (not provided).
- Warning: Always ensure intended wall area to be drilled is free from hidden electrical wire, water and gas pipes.
- If in doubt please consult a qualified trades person.

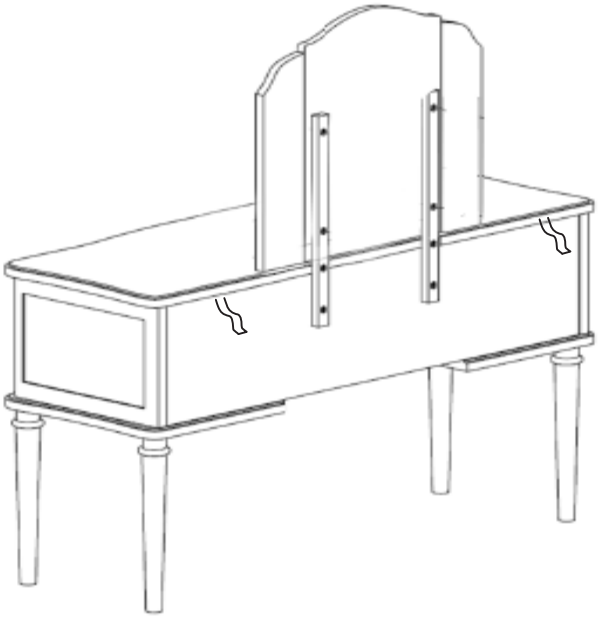

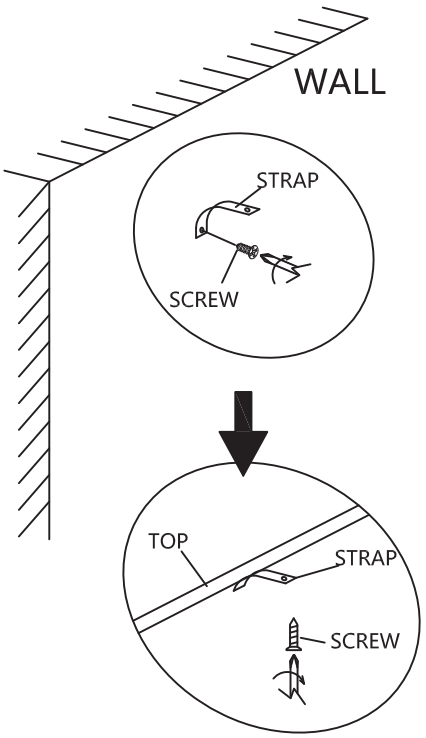

Someford

DRESSING TABLE WITH MIRROR

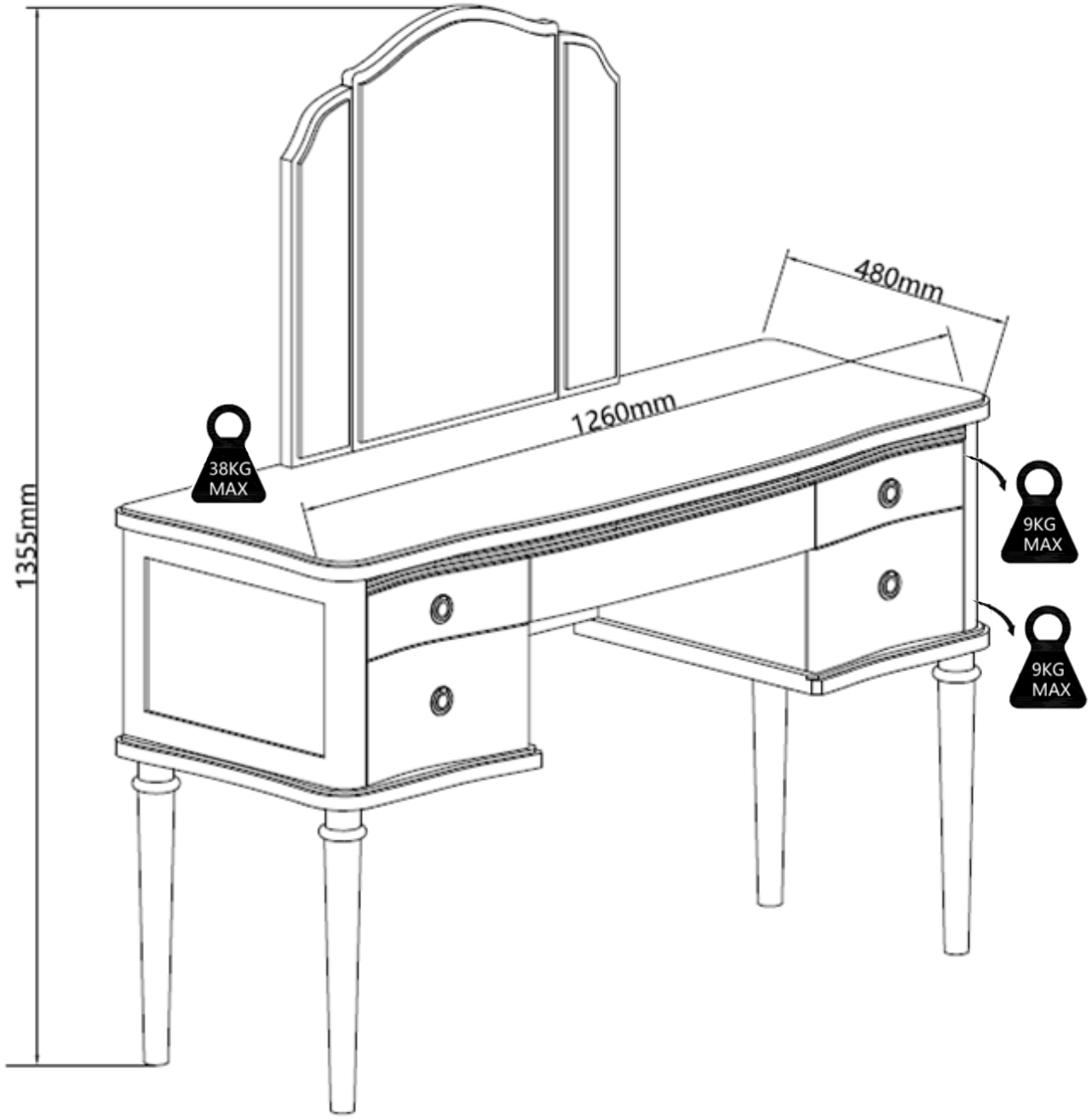

⚠ Check regularly that all assembly fastenings are properly tightened and re-tighten when necessary.

LAURA ASHLEY
SINCE 1953

lauraashley.com