NEXT

HAMPTON CHAIR
D88668-115371-888946-N33840-N25704-653912-AY5865-Q76934-D91512 -F03014-H59780-H78625-G14114-V27387

Assembly instructions

Actual product size
H83×W72.5×D86cm

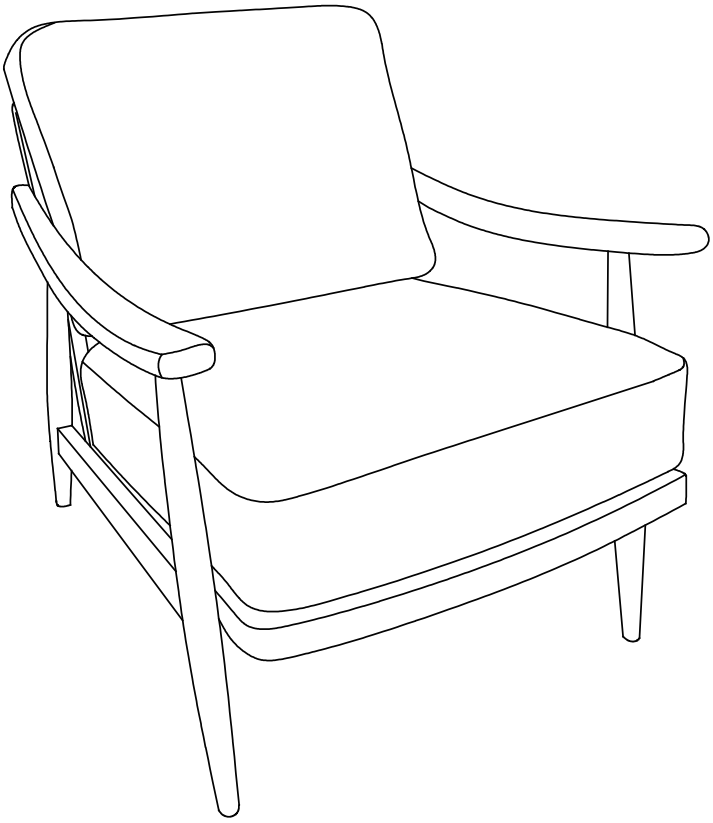

Need Help ?

With: Assembly instruction
Missing or damaged parts

CALL: 0333 777 8999

IMPORTANT – RETAIN FOR FUTURE REFERENCE

Produced in China for Next Retail Ltd.
D88668-115371-888946-N33840-N25704-653912-AY5865-Q76934-D91512-F03014-H59780-H78625-G14114-V27387-2025-V1.

HAMPTON CHAIR
F03014-D88668-115371-888946-N33840-N25704-653912-AY5865-Q76934-D91512
G14114-V27387-H78625-H59780

BEFORE YOU START

Assembly instructions

Number of people required to assemble
One people are required to assemble this item
Time to assemble: 30 minutes

Item No.	Fabric name - leg	Fabric composition
G14114	VERSATILE CHECK NEVIS GREY- LIGHT OAK FRAME	100% polyester
H78625	TEXTURED BOUCLE WEAVE MID NATURAL -WALNUT FRAME	100% polyester
888946	FINE CHENILLE GRANITE BLUE- LIGHT OAK FRAME	100% polyester
N33840	FINE CHENILLE NATURAL SAND- LIGHT OAK FRAME	100% polyester
653912	TWEEDY WEAVE DOVE- LIGHT OAK FRAME	100% polyester
V27387	MULTI CHECK CHENILLE OLIVE GREEN- LIGHT OAK FRAME	100% polyester
AY5865	VINTAGED FAUX LEATHER CHOCOLATE-WALNUT FRAME	100% polyester
Q76934	RELAXED CHENILLE FOREST GREEN -WALNUT FRAME	100% polyester
D91512	FINE CHENILLE OCHRE-WALNUT FRAME	100% polyester
F03014	WOVEN GEOMETRIC BLUE- LIGHT OAK FRAME	100% polyester
H59780	SOFT VELVET CHESTNUT BROWN- -WALNUT FRAME	100% polyester

Do's

We suggest you spend a short time reading through this leaflet before you start. When you are ready to start, make sure that you have the right tools and plenty of space.
Unwrap all packaging materials and place the components on a clean surface to protect it from damage. We recommend that the packaging is used to protect the surfaces during assembly.
Carefully check that you have all the parts before beginning assembly.
Ensure the product is fully assembled as illustrated and all fixings fully tightened before use. Check fixings regularly to ensure they remain tight.
Always wipe dry after cleaning.
To clean your item, please use a soft cloth slightly dampened with water and wipe clean. Then buff with a dry clean cloth.

Warnings

We suggest you retain these instructions for future reference.
Keep fittings out of children's reach and keep children well away from construction area. This product should only be used on firm level ground
Please periodically check all fittings and re-tighten as necessary.
Avoid exposing the furniture to excessive heat or direct sunlight as this can cause cracking of the wood and deterioration of the colour.
Unwrap all packaging materials and place the components on top of the carton box or on a clean floor to protect it from damage.

Home Service Technicians
If you have a fault with your product, please contact our customer service team on **0333 777 8999.** If you have had the product for 28 days or less you may be offered a replacement, refund or for a fully trained home service technician to visit your home to assess the fault and repair the product where possible. If you have had the product for more than 28 days we will send an independant home service technician to review and repair the product where possible and recommend further action.

Dont's

Never allow any kind of liquid to remain on your furniture. Absorption can cause wood to warp or finishes to de-laminate.
Do not stand or lean back on your chairs.
Do not use silicone based furniture polish. Silicone in furniture polishes can break down the lacquer finish.

Missing parts

If you are missing any fixtures and fittings for your product.. Please contact our customer service team on 0333 777 8999 and they will be happy to arrange for a replacement to be sent to you free of charge.

You can write to us at
Home Customer Services
Next Retail Ltd
Desford Road,
Leicester,
LE19 4AT

To view our full furniture range please visit **www.next.co.uk**

Need Help ?

With: Assembly instruction
Missing or damaged parts

CALL: 0333 777 8999

Produced in China for Next Retail Ltd.
D88668-115371-888946-N33840-N25704-653912-AY5865-Q76934-D91512-F03014-H59780-H78625-G14114-V27387-2025-V1.

GETTING TO KNOW YOUR PRODUCT

Assembly instructions

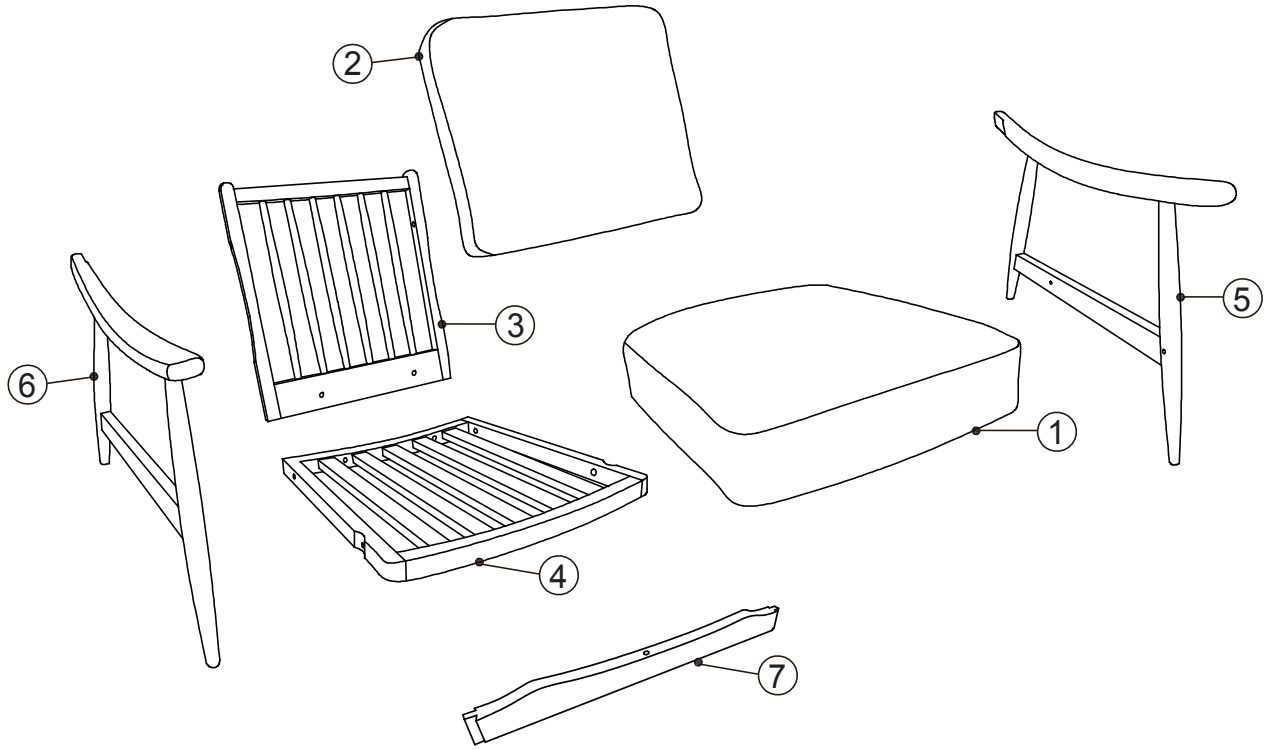

Components supplied. Please use this guide if you require replacement parts.

Ref	Dimension	Visual	Qty	Ref	Dimension	Visual	Qty
1	Seat bag: H18.5xW61xD66CM		1	5	Left Arm: H7xW75xD60CM		1
2	Back bag: H15xW60xD43CM	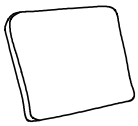	1	6	Right Arm: H7xW75xD60CM		1
3	Back panel: H5.5xW62xD61.5CM		1	7	Cross rail: H7xW75xD60CM		1
4	Base panel: H5.5xW58xD59CM		1				

Fixtures and fittings supplied (actual size)

Ref	Dimension	Qty	Spare
A	M8x40mm	9	1
B	M6x45mm	2	1
C	17mm	6	1
D	6 x 80mm	1	0

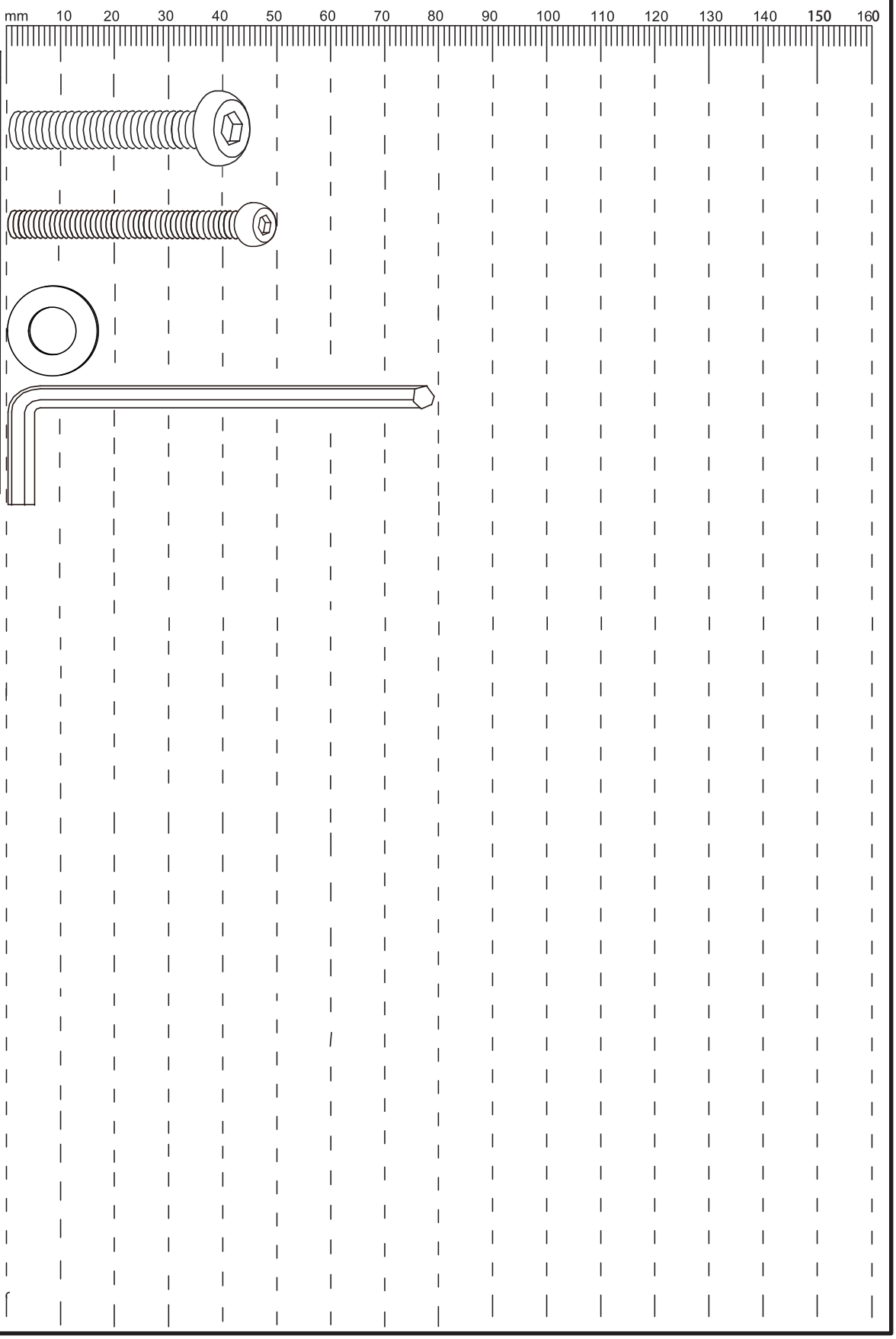

1.

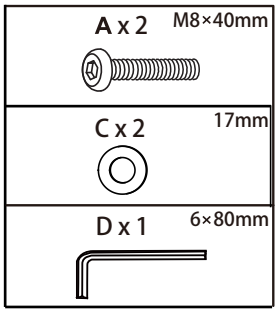
A x 2
M8×40mm
C x 2
17mm
D x 1
6×80mm

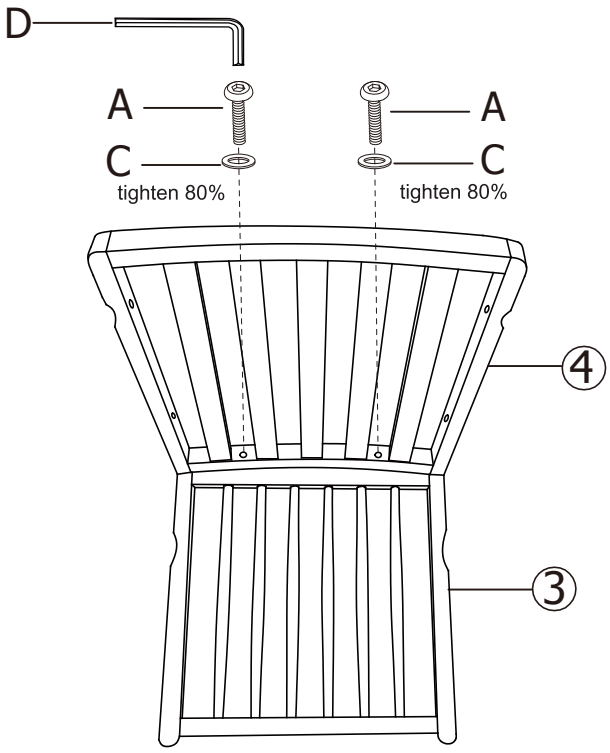
D
A
C
tighten 80%
A
C
tighten 80%
4
3

2.

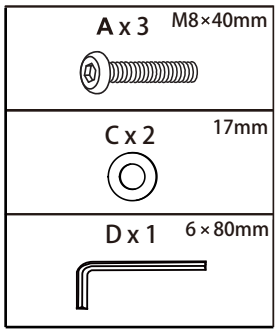
A x 3
M8×40mm
C x 2
17mm
D x 1
6 × 80mm

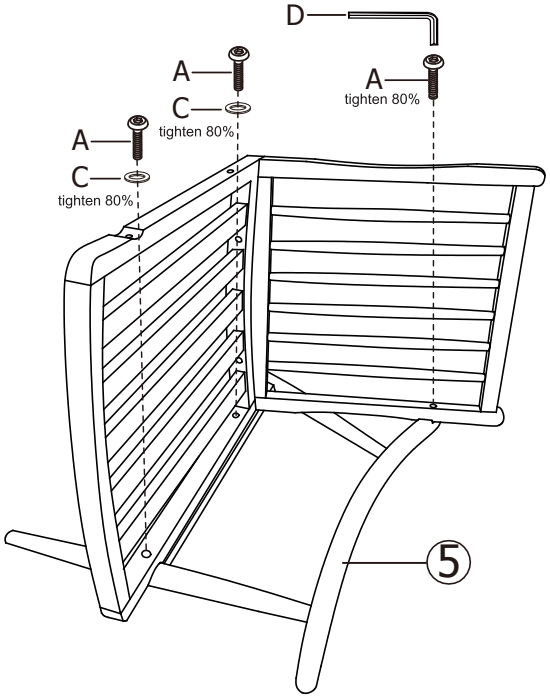
D
A
C
tighten 80%
A
tighten 80%
A
C
tighten 80%
5

3.

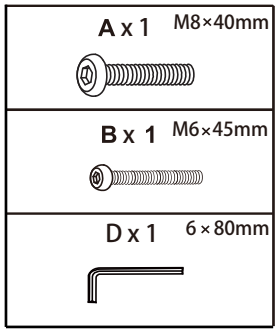
A x 1
M8×40mm
B x 1
M6×45mm
D x 1
6×80mm

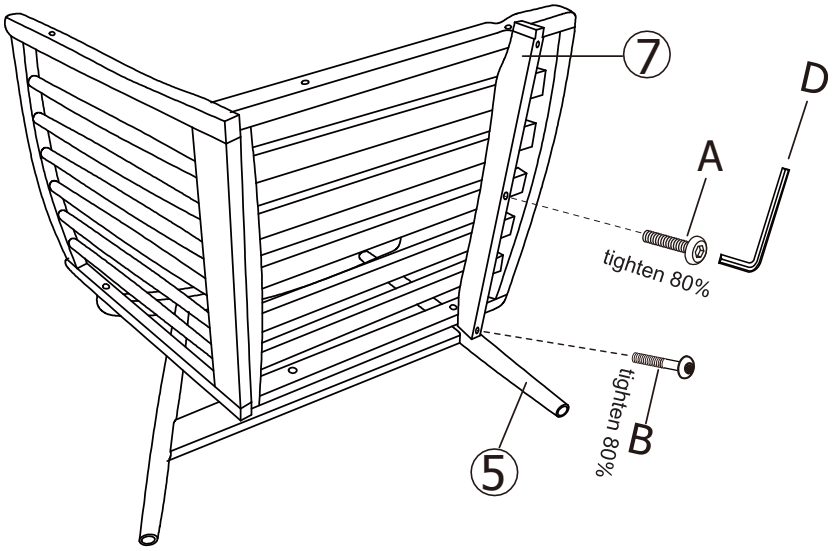
7
D
A
tighten 80%
tighten 80%
B
5

4.

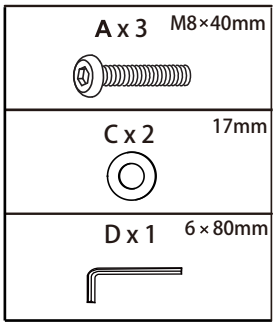
A x 3
M8×40mm
C x 2
17mm
D x 1
6×80mm

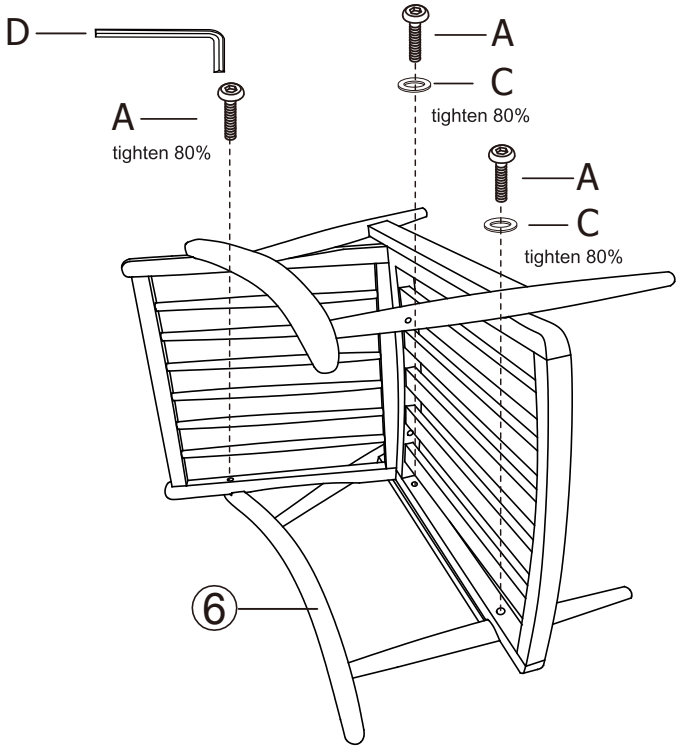
D
A
tighten 80%
A
C
tighten 80%
A
C
tighten 80%
6

5.

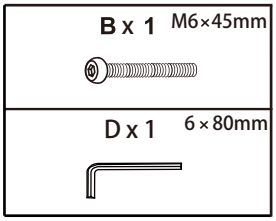
B x 1
M6×45mm
D x 1
6×80mm

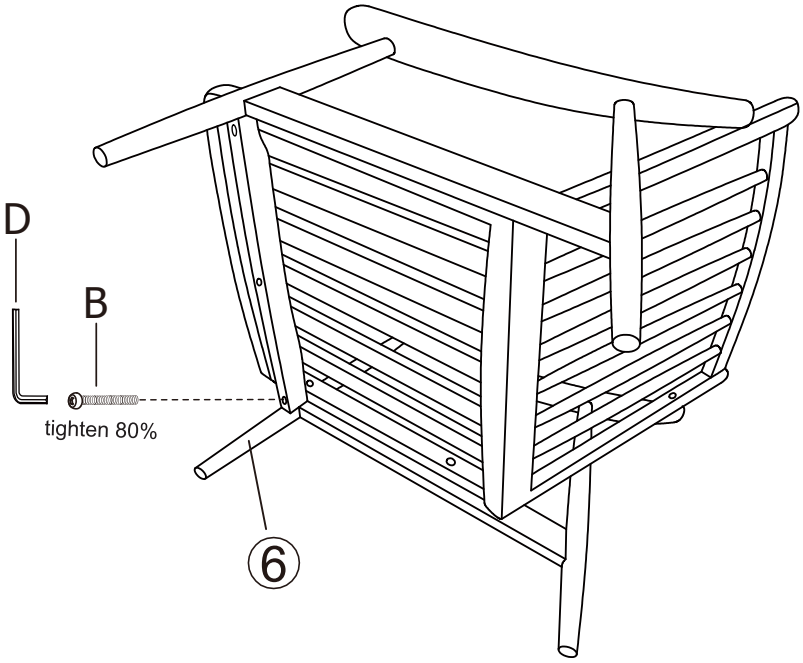
D
B
tighten 80%
6

6.

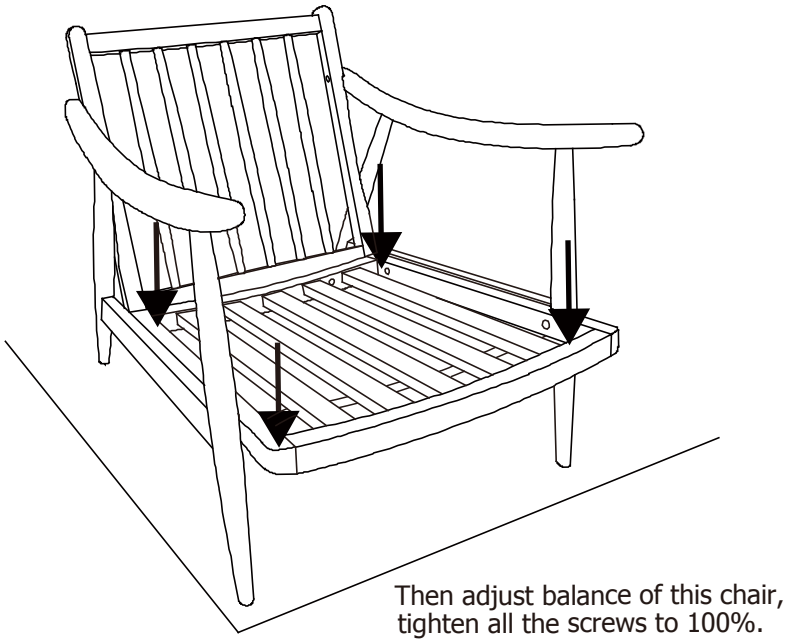
Then adjust balance of this chair,
tighten all the screws to 100%.

7.

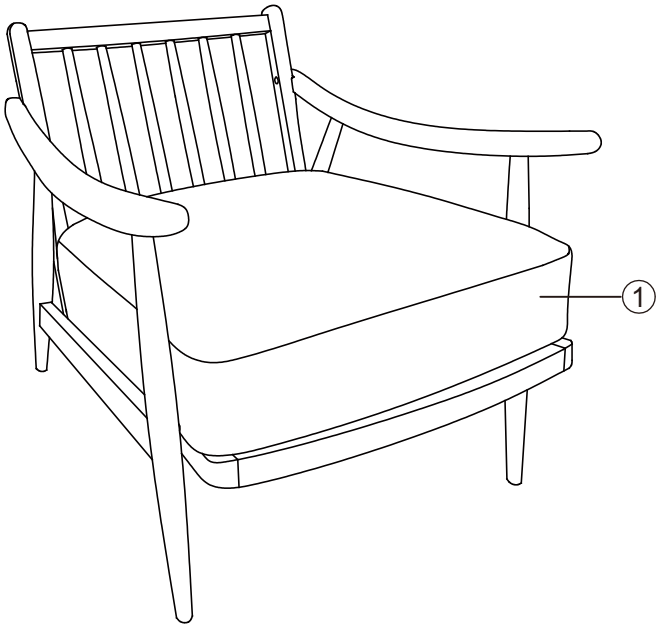

8.

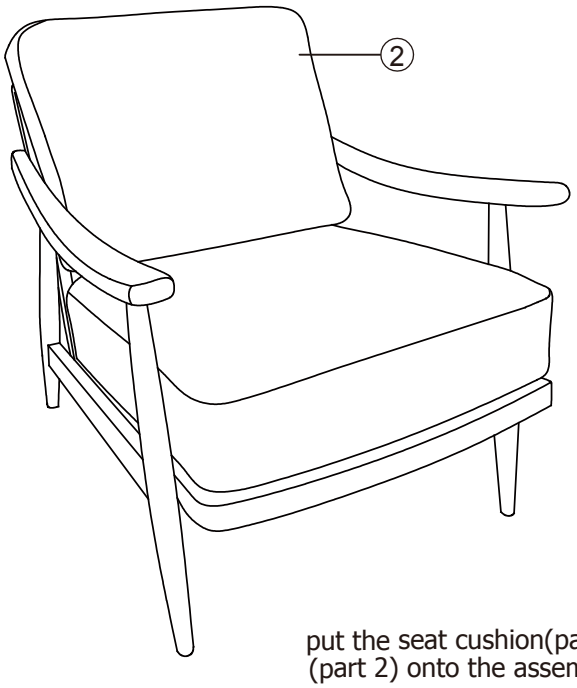

put the seat cushion(part 1) and backrest cushion (part 2) onto the assembled chair frame.

NEXT

HAMPTON CHAIR
D88668-115371-888946-N33840-N25704-653912-AY5865-Q76934-D91512 -F03014-H59780-H78625-G14114-V27387

Assembly instructions

Actual product size
H83×W72.5×D86cm
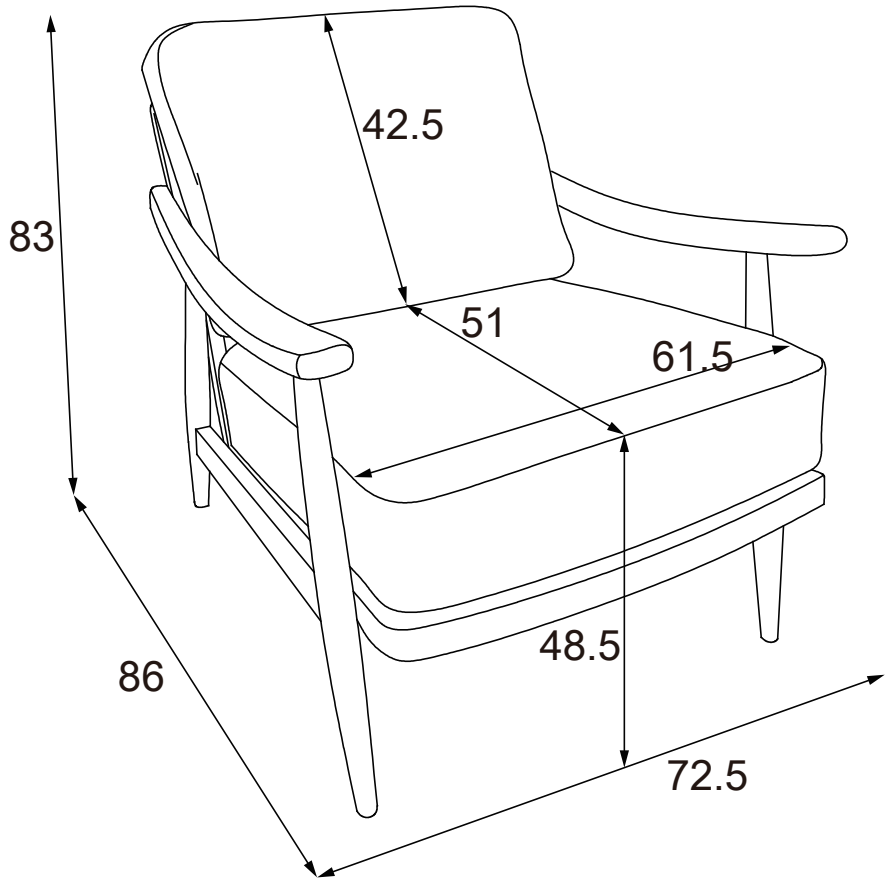
CAUTION: Maximum weight capacity of this chair is 130kg.