SWOON

BT0091W

Fresco Bedside

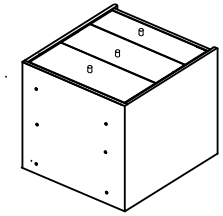

1 x Box

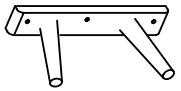

2 x Leg

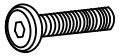

6 x Allen bolt 6 x 30 mm

6 x Washer 8 x 25 mm

6 x Spring Washer 8 x 16 mm

1 x Allen Key 4 mm

EXTRA HARDWARE	2 x Allen bolt 6 x 30 mm 2 x Washer 8 x 25 mm 2 x Spring Washer 8 x 16mm

" Important "

Use mat or carpet to assemble the product to avoid scratches.

①

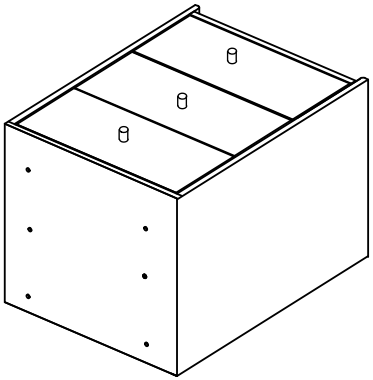

②

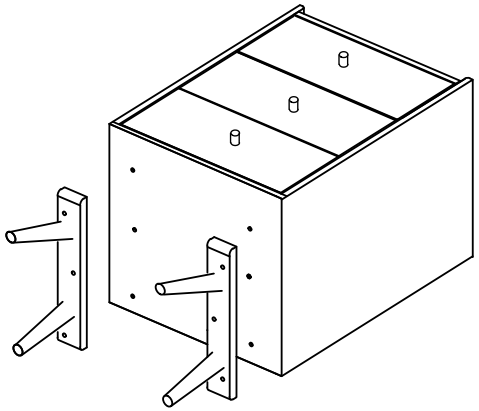
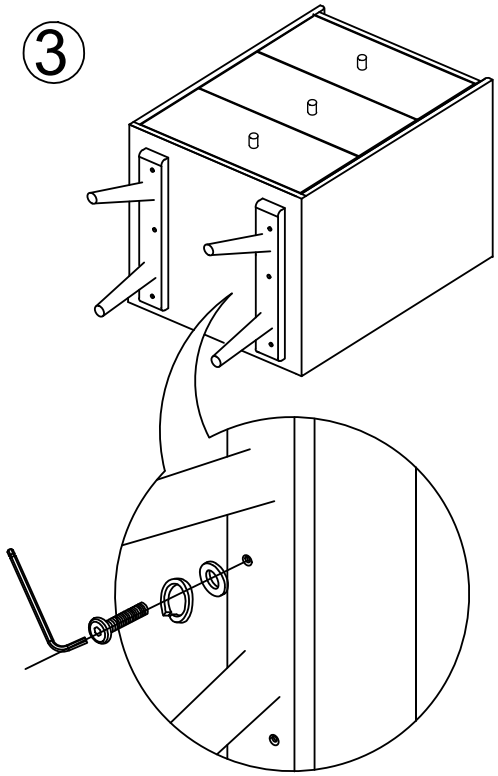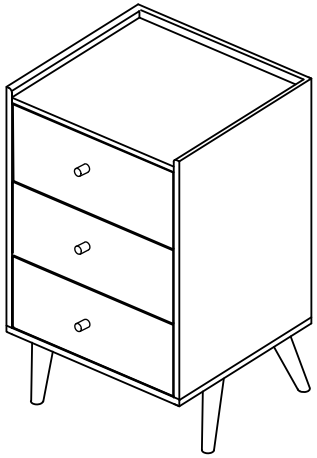
③