SWOON

## TERNING DESK-DOUBLE

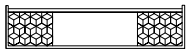

**DESK TOP**

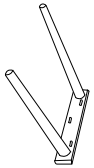

**2 X LEG'S**

**6 X ALLEN BOLT**
**6 x 40MM**

**1 X ALLEN KEY**
**4MM**

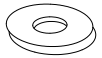

**6 X WASHER**

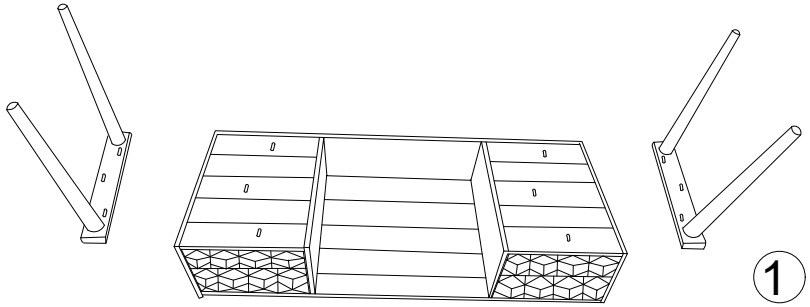

1

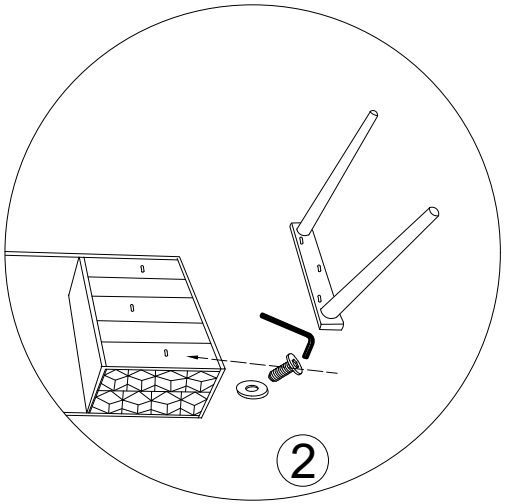

2

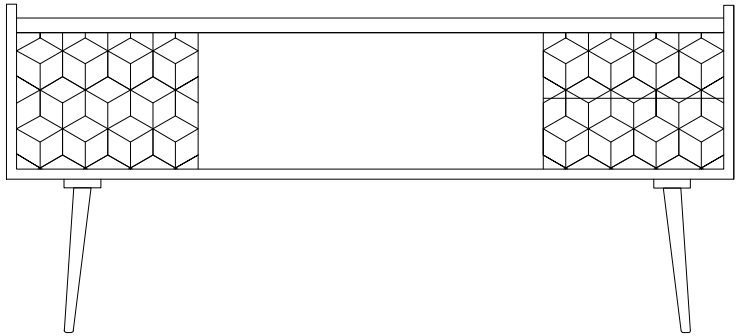

3

ASSEMBLED
NOTE : PLEASE ASSEMBLE ON A MAT OR CARPET
DURING ASSEMBLY ENSURE LABELLED FIXING POINT'S MATCH.