CLAUDINE BEDSIDE TABLE

SKWN210

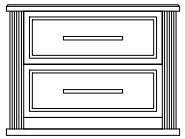

1 X BEDSIDE TOP

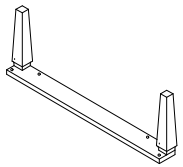

2 X LEG

8 X ALLEN BOLT
6 x 30mm

1 X ALLEN KEY
4MM

8 X WASHER

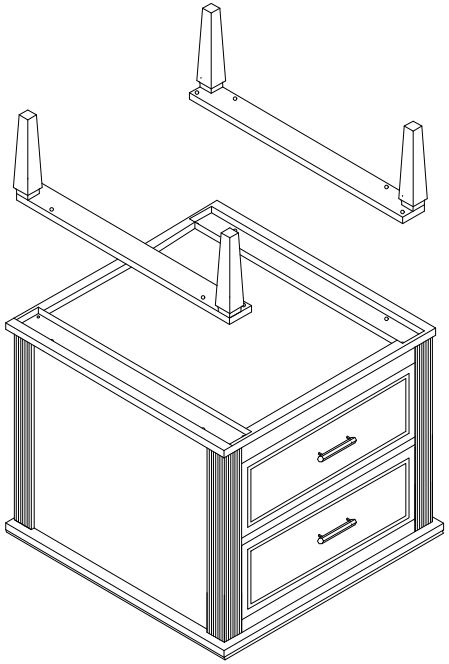

1

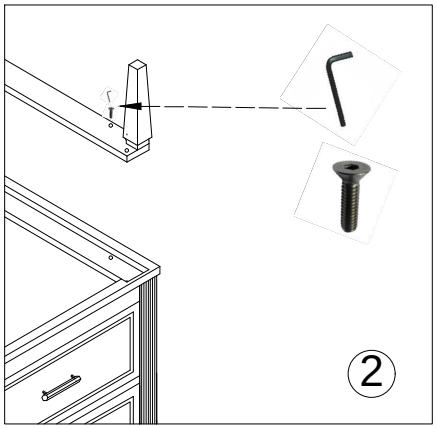

2

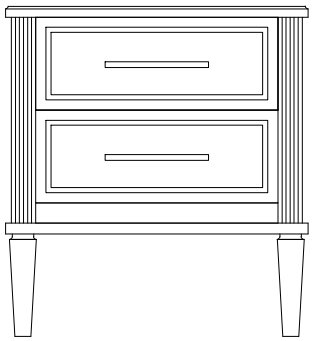

3

ASSEMBLED
NOTE : PLEASE ASSEMBLE ON A MAT OR CARPET