BRONX GREY SMALL SIDEBOARD OVVO N55052
BRONX SMALL SIDEBOARD OVVO K78416
Assembly instructions

Actual product size
H75.5 x W101 x D39cm

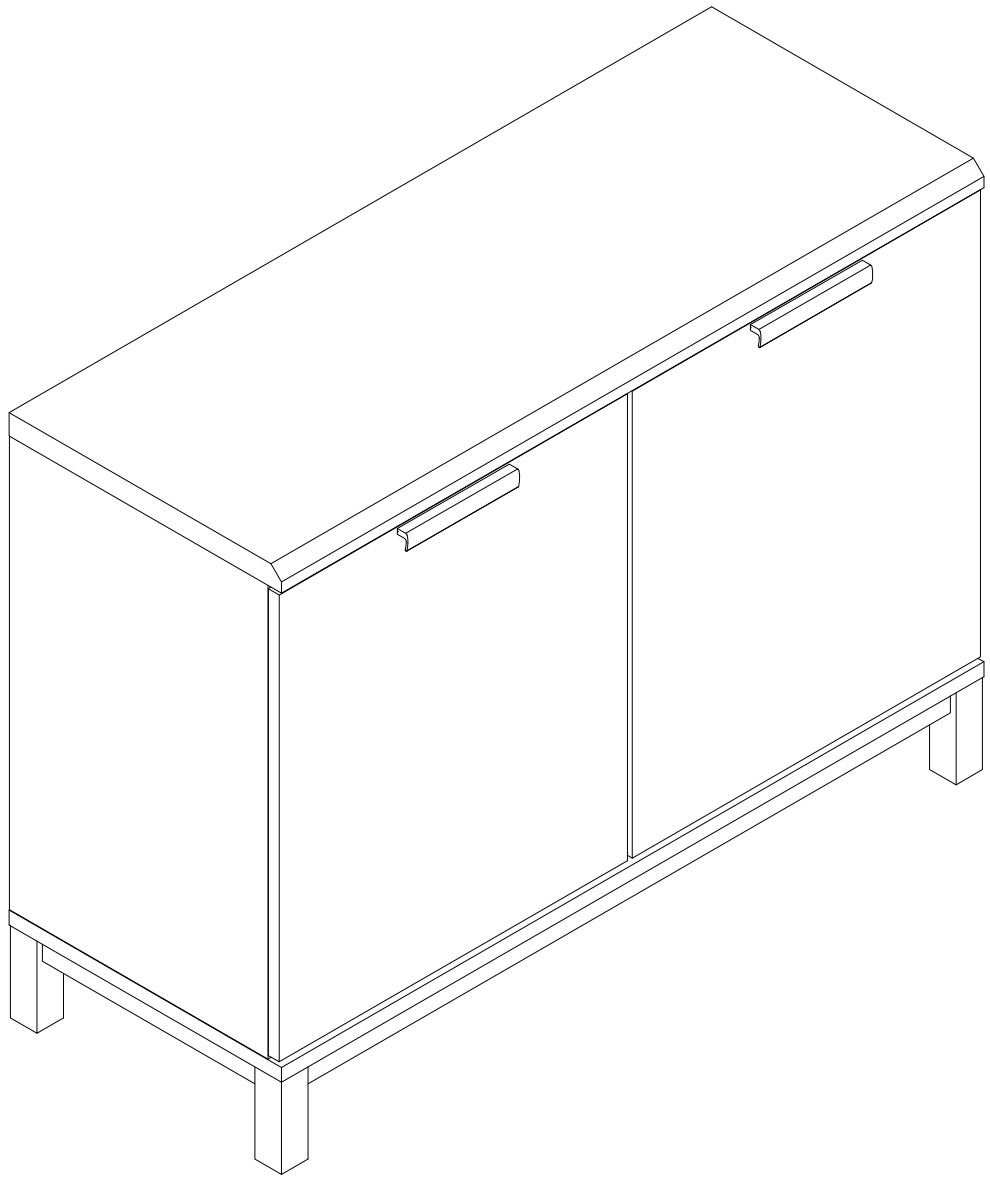

Need Help?

With: Assembly instructions
Missing or damages parts

IMPORTANT - RETAIN FOR FUTURE REFERENCE

CALL: 0333 777 8999

Produced in Indonesia for Next Retail Ltd.
N55052/K78416-2024-V1

BEFORE YOU START

Number of people required to assemble

Two people are required to assemble this item



Time to assemble



30 min

Tools required

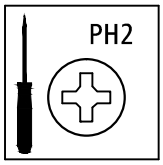

not supplied

Do's

We suggest you spend a short time reading through this leaflet before you start

When you are ready to start, make sure that you have the right tools and plenty of space

Unwrap all packaging materials and place the components on a clean surface to protect them from damage, we recommend that the packaging is used to protect the surfaces during assembly

Carefully check that you have all the parts before beginning assembly

Due to the size of the product we recommend that it is assembled in the room intended for use

Ensure the product is fully assembled as illustrated and all fixings fully tightened before use

Wipe occasionally with a soft cloth slightly dampened with water. Then buff with a dry clean soft cloth

Wood will mellow and change colour over time, we recommend that ornaments and items placed on the surface are moved regularly for the first few months to prevent uneven mellowing

Don'ts

Do not drag or pull your furniture

Do not rub or scrub the surface when cleaning

Do not use silicone based furniture polish. Silicone in furniture polishes can break down the finish

Never allow any kind of liquid to remain on your furniture. Absorption can cause wood to warp or finishes to de-laminate

Do not place hot items (e.g.hot drinks) directly on to the wood surface. Please make sure you use a placemat or coaster

Do not use this item if any components are missing or damaged.

GETTING TO KNOW YOUR PRODUCT

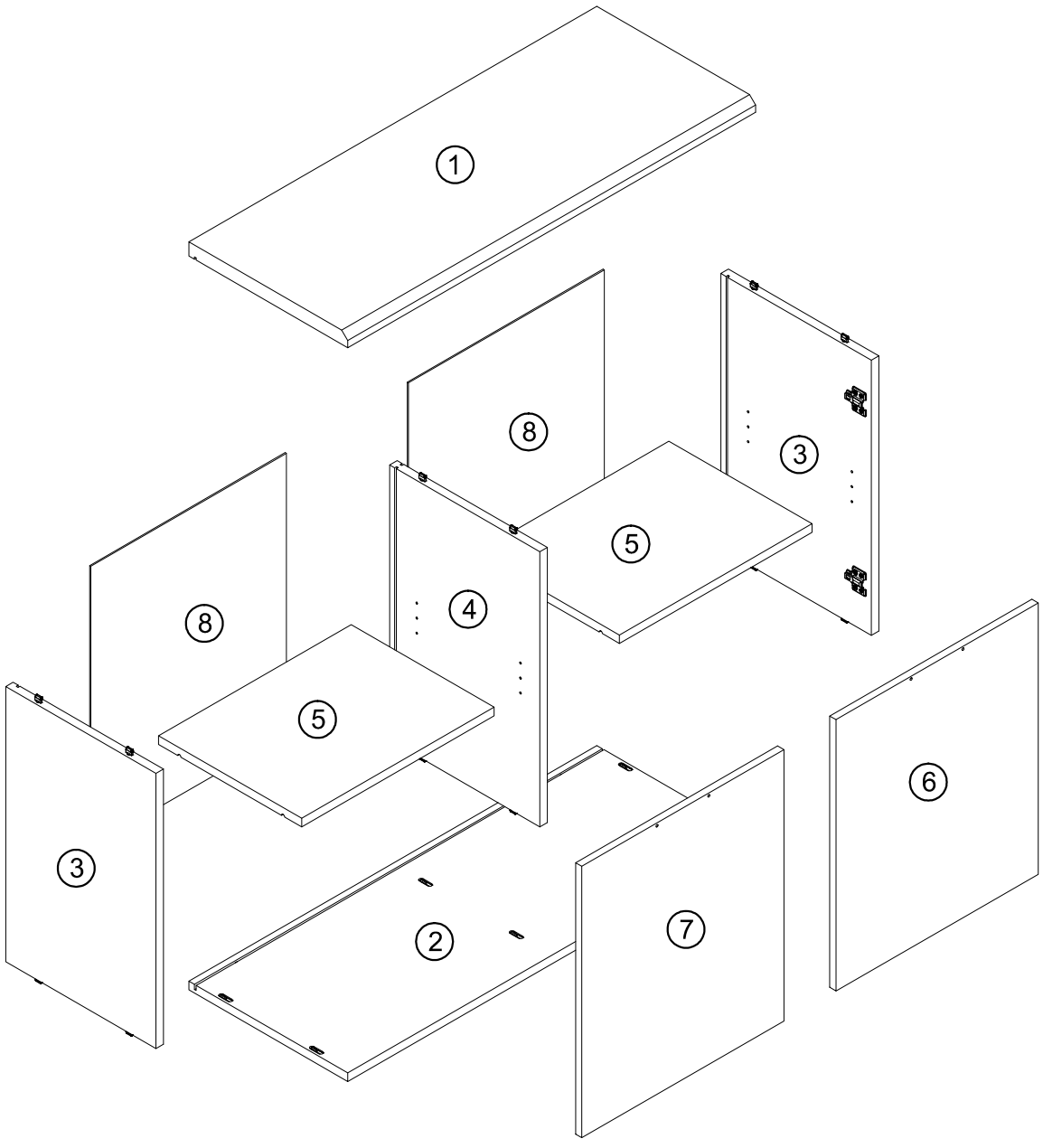

Assembly instructions

Components supplied. Please use this guide if you require replacement parts.

Ref	Dimensions	Visual	Qty	Ctn
1	100.6 x 39.1cm	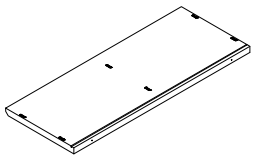	1	1
2	100.6 x 39.1cm	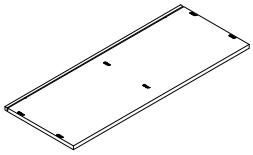	1	1
3	58.8 x 37.1cm	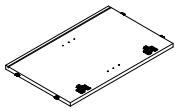	2	1
4	58.8 x 37.1cm	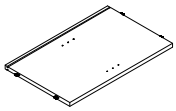	1	1
5	47.4 x 35.3cm	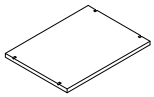	2	1
6	49.8 x 57.9cm	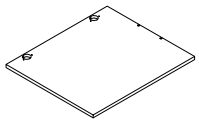	1	1
7	49.8 x 57.9cm	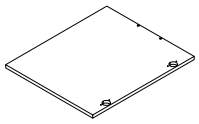	1	1
8	48.4 x 59.8cm	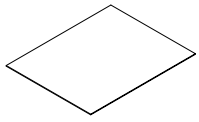	2	1

BRONX GREY SMALL SIDEBOARD OVVO N55052
BRONX SMALL SIDEBOARD OVVO K78416
Assembly instructions

Fixtures and fittings supplied (actual size)

Ref	Dimensions	Qty	Spare Qty
a	Ø7 x 40mm	8	1
n3	Ø6 x 12mm	4	1
i	Ø4 x 18mm	8	N/A
j	Ø4 x 15mm	8	8

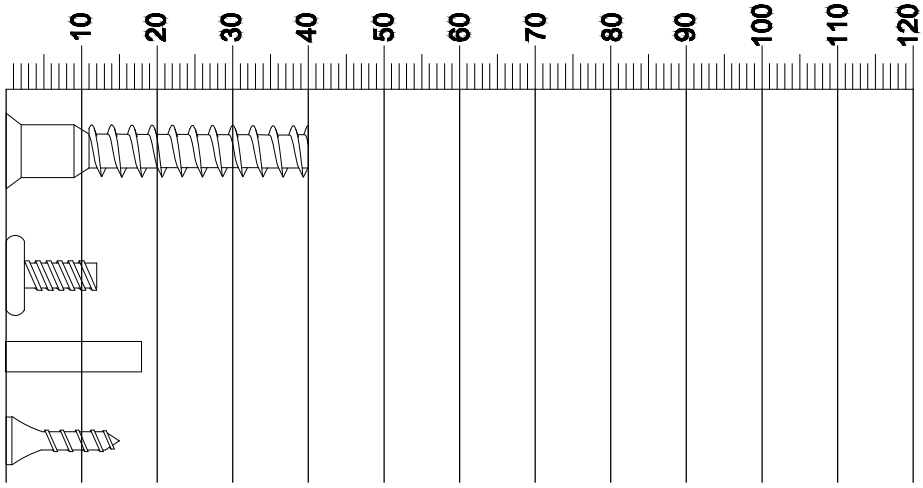

Fixtures and fittings supplied (not to scale)

Ref	Dimensions	Qty	Spare Qty	Visual
h	N/A	2	N/A	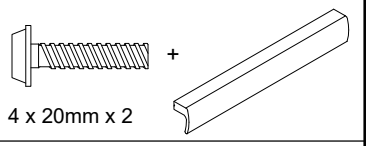 4 x 20mm x 2
o	N/A	2	N/A	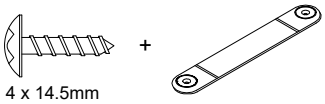 4 x 14.5mm
p	N/A	4	N/A	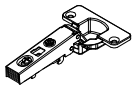
n1	N/A	2	N/A	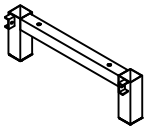
n2	N/A	2	N/A	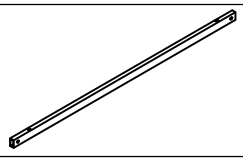

Ref	Dimensions	Qty	Spare Qty	Visual
n9	N/A	4	1	
n6	N/A	1	N/A	
u	N/A	8	N/A	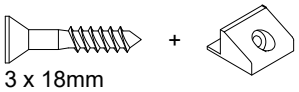 3 x 18mm
v	N/A	4	N/A	

Fittings Assembly Instructions

Insert it into the slot, the front should be flush as shown.

Option1

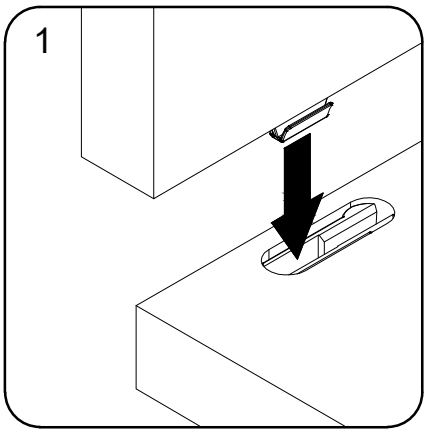

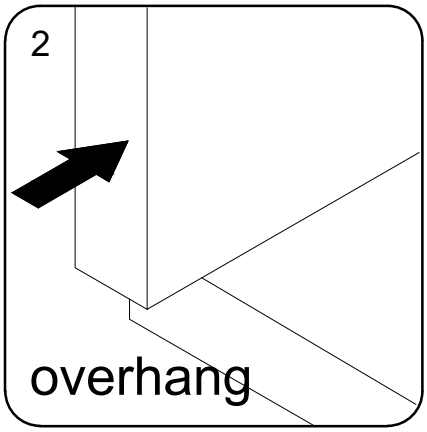

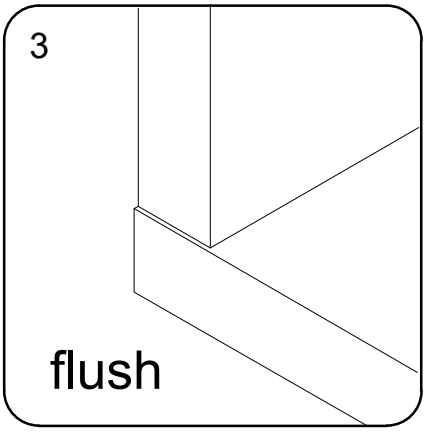

Option2

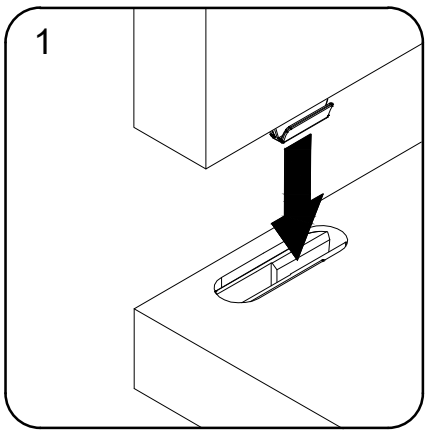

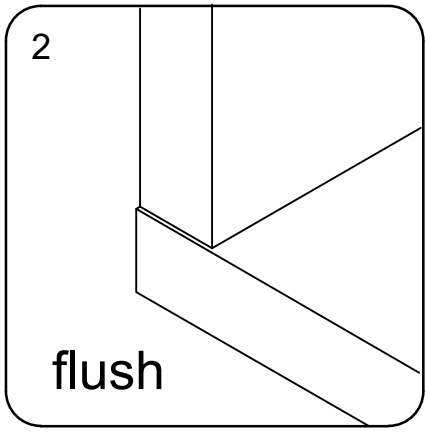

BRONX GREY SMALL SIDEBOARD OVVO N55052
BRONX SMALL SIDEBOARD OVVO K78416
Assembly instructions

1

n3 x 4 6 x 12mm

supplied

n2 x 2

n9 x 4

n1 x 2

n6 x 1

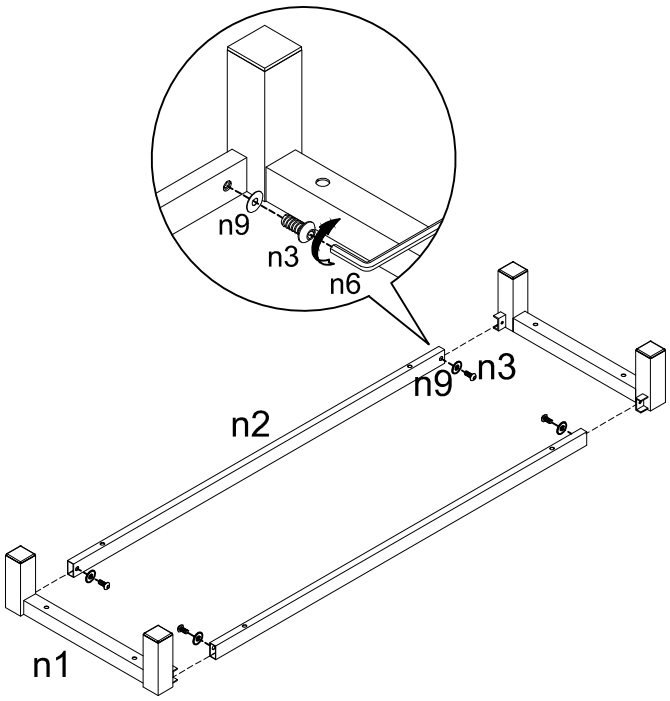

2

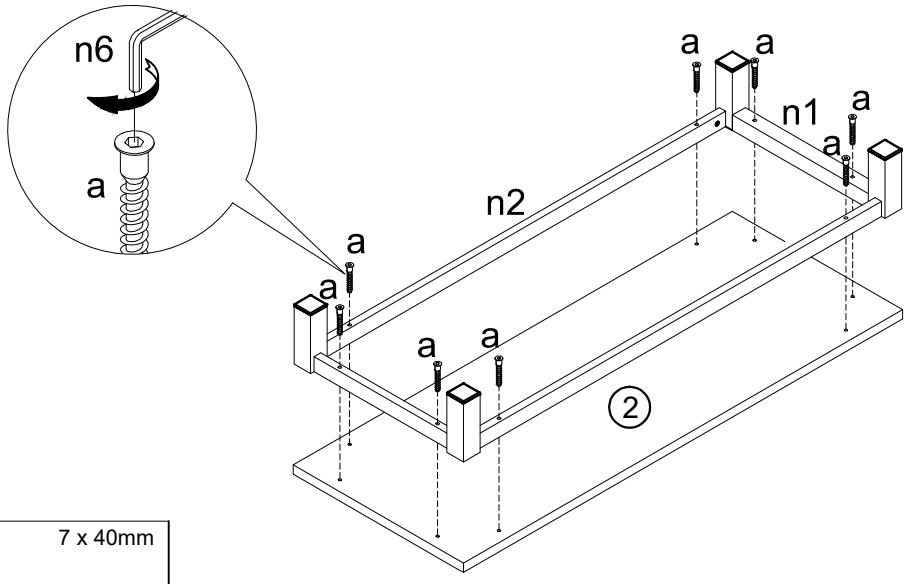

a x 8 7 x 40mm

supplied

3

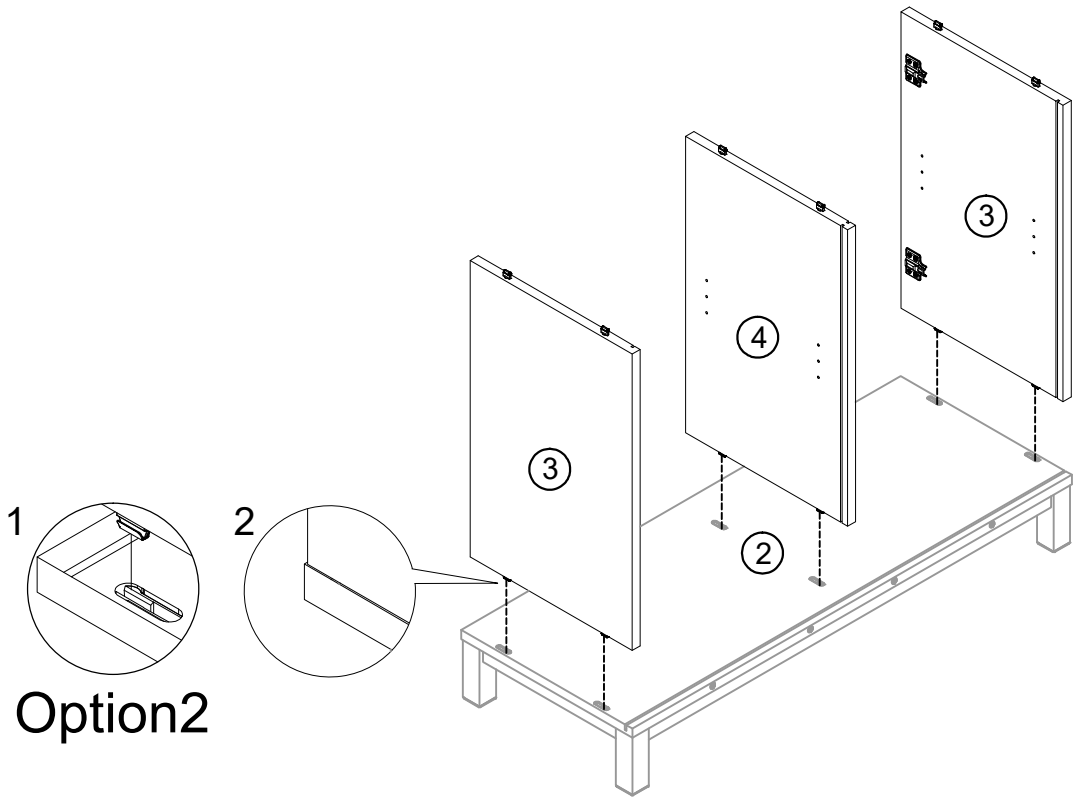

4

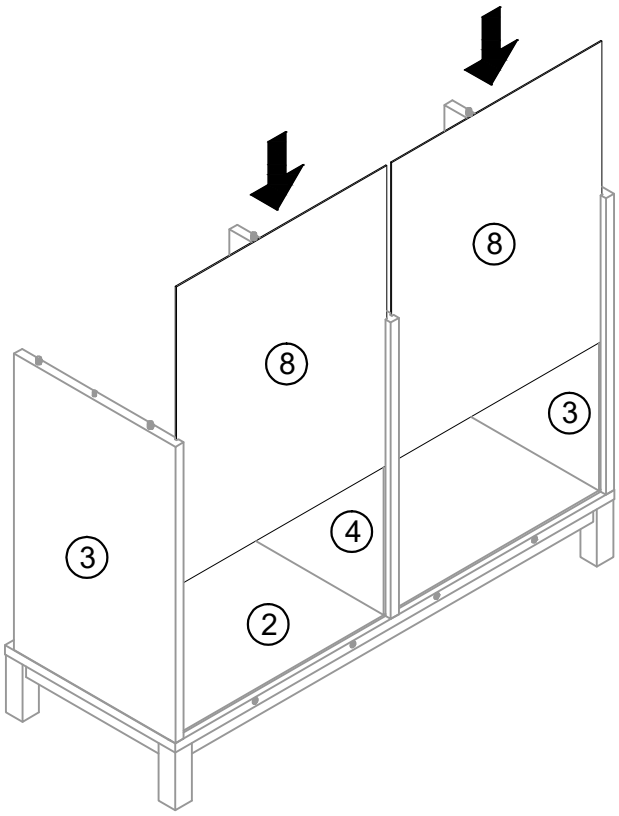

5

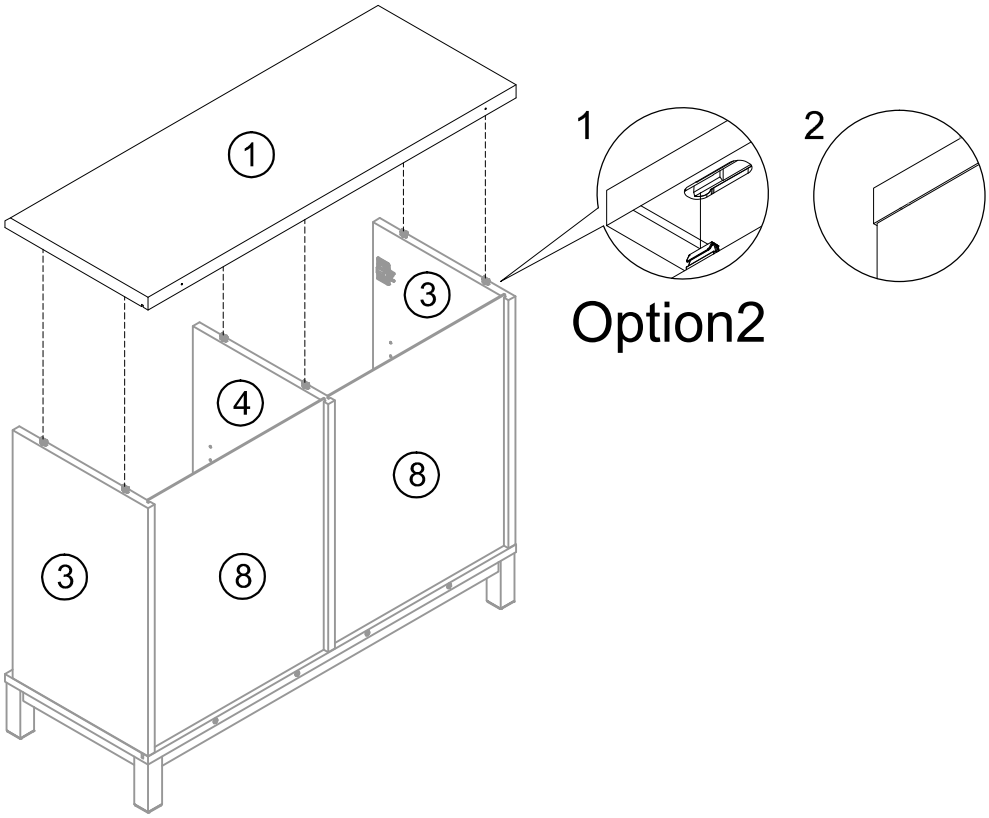

6

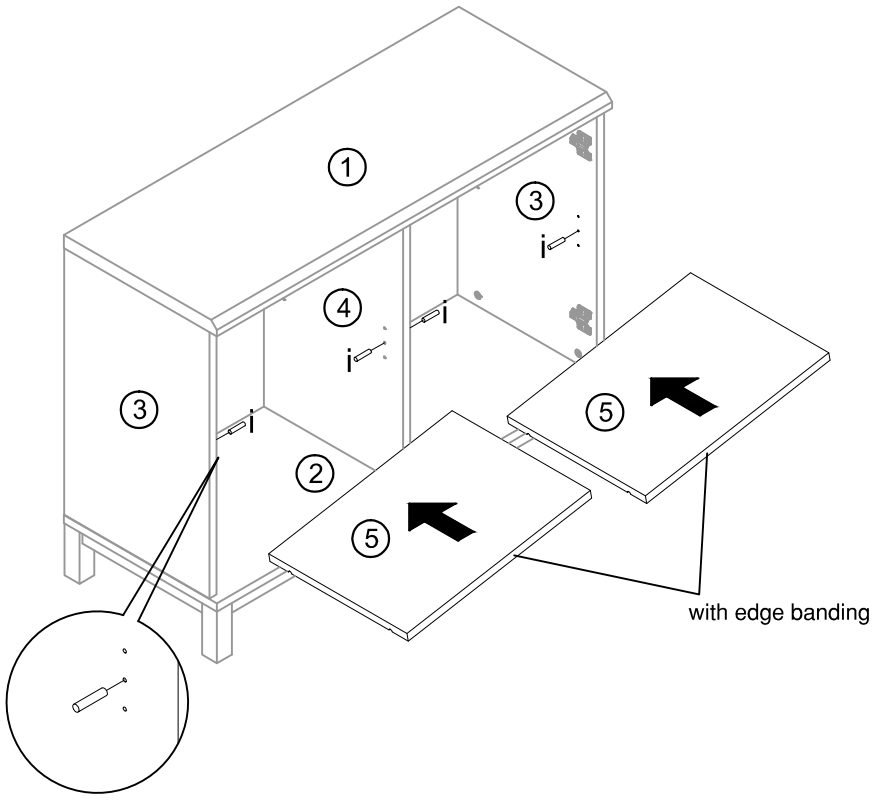

i x 8

7

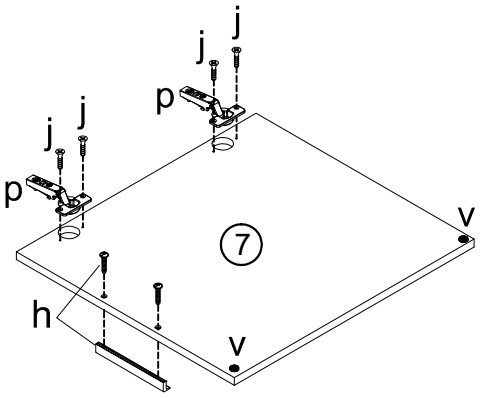

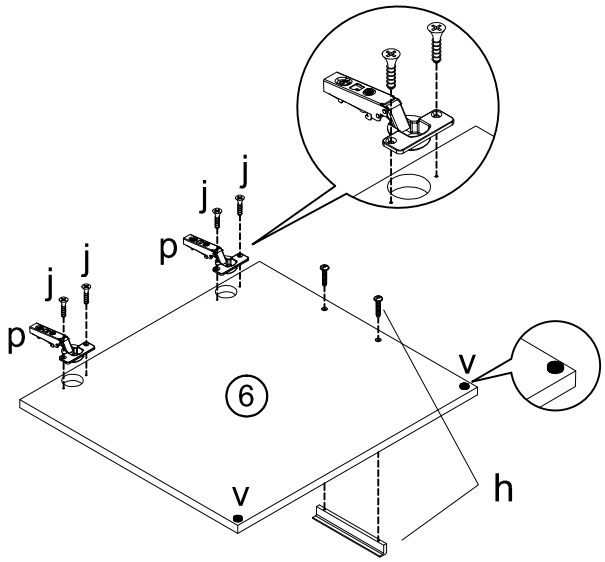

p x 4

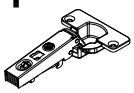

v x 4



PH2

not supplied

j x 8

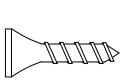

4 x 15mm

PH2

not supplied

h x 2

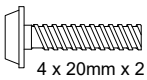

+

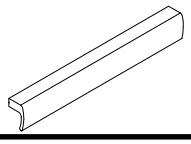

4 x 20mm x 2

8

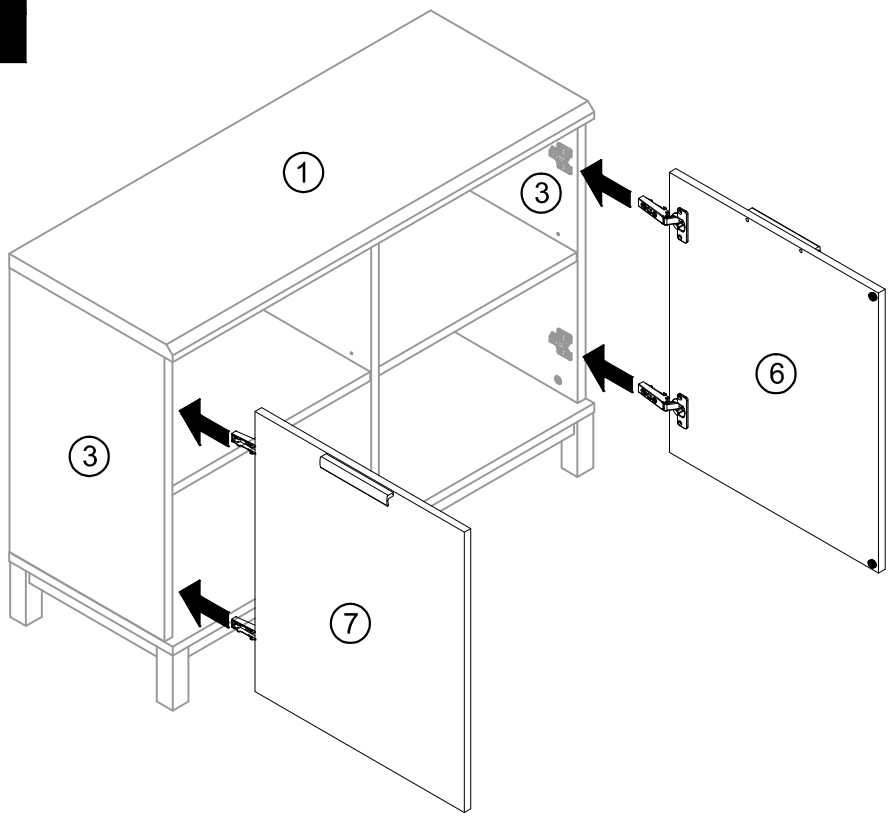

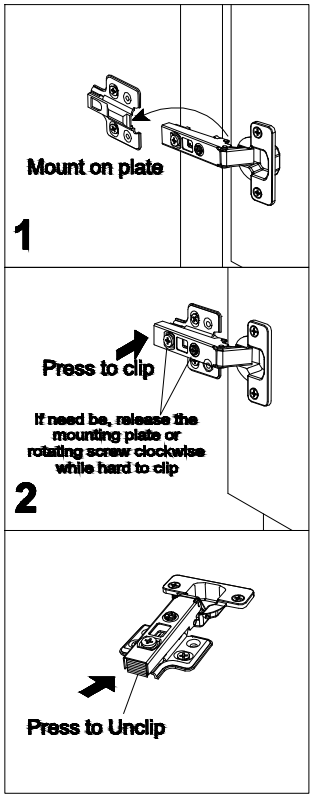

9

Door hinge adjustment instructions

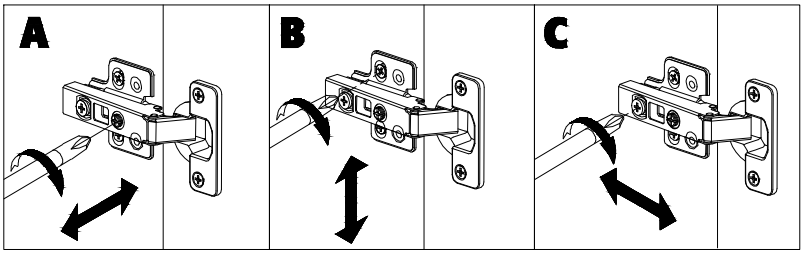

A. Side to side adjustment by clockwise or anticlockwise adjustment .

B. Up and down adjustment by adjusting mounting plate slot .

C. Front to back adjustment by rotating screw clockwise or anticlockwise.

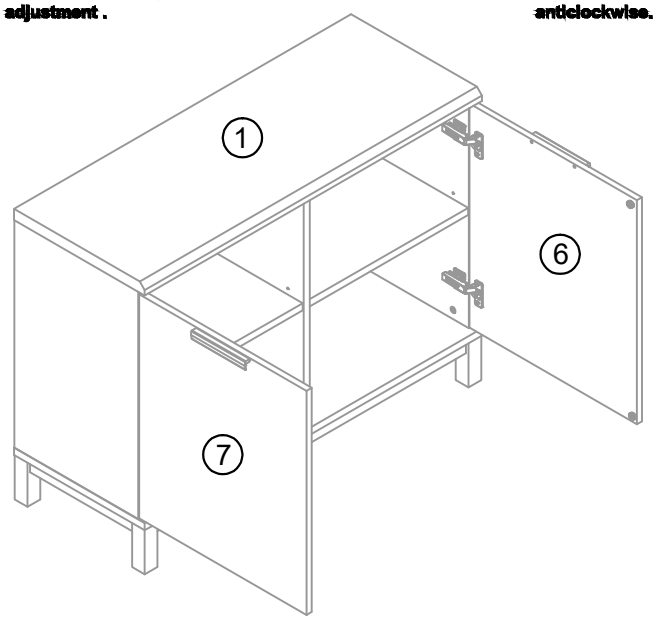

Note:
Lock the hinge after adjustment ! If need be, add screws on the mounting plate to strengthen it.

10

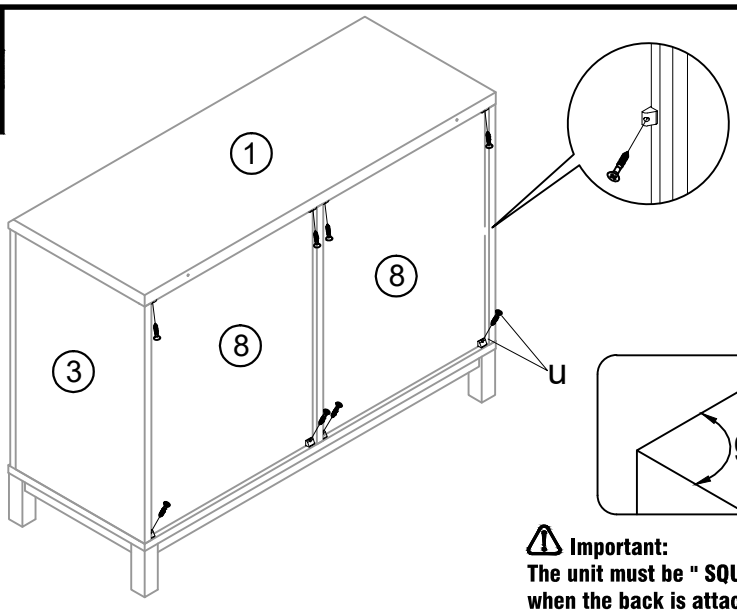

Important:
The unit must be " SQUARE" when the back is attached.
Use the back panel to check the squareness of the unit before attaching.

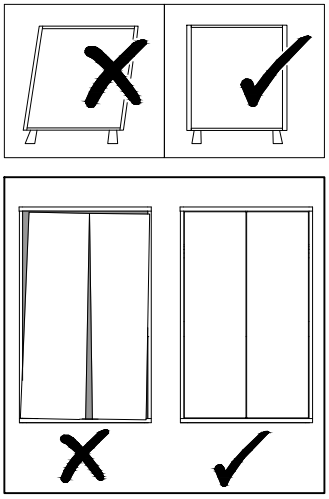

Please ensure all doors are aligned and evenly spaced before applying the back panel fixings.

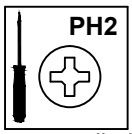

not supplied

u x 8

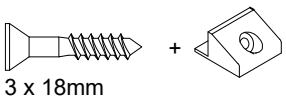

3 x 18mm

11

We recommend the use of the wall attachment bracket/strap provided for safety reasons.

Secure the other end of the strap to the wall with an appropriate screw and wall plug for your wall type (not provided).

To hide the strap behind the unit, drill the hole lower than the top of unit.

Warning: Always ensure intended wall area to be drilled is free from hidden electrical wire, water, and gas pipes , If in doubt please consult a qualified trades person.

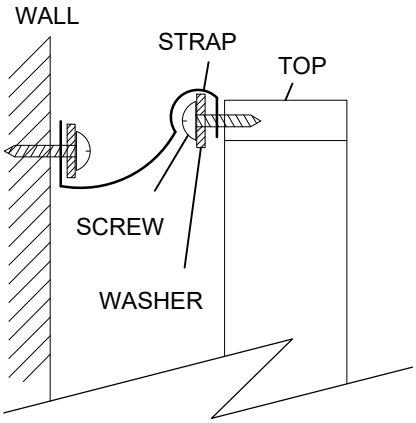

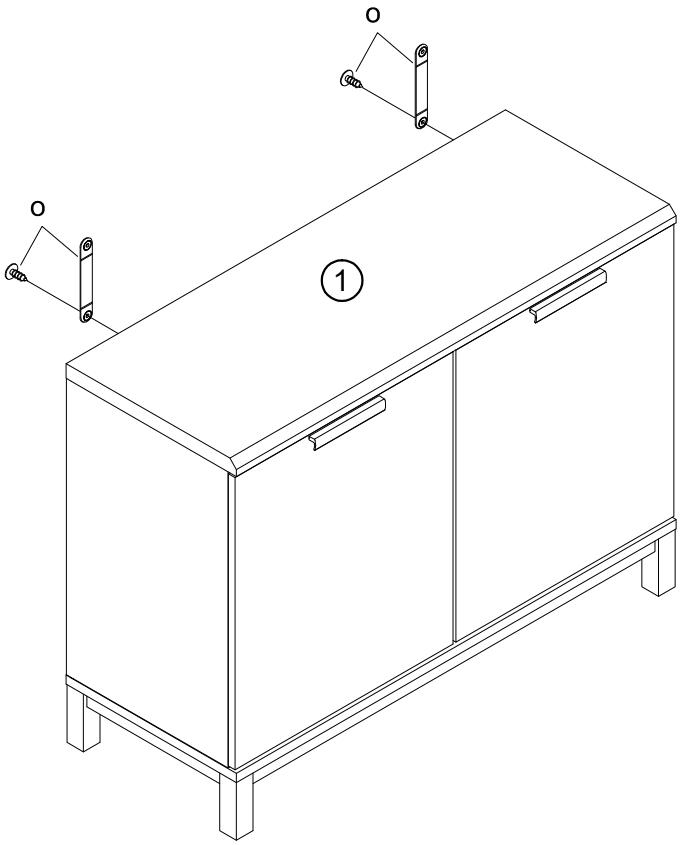

o x 2

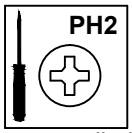

not supplied

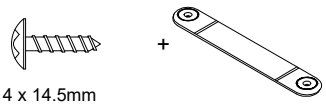

4 x 14.5mm

DISASSEMBLY



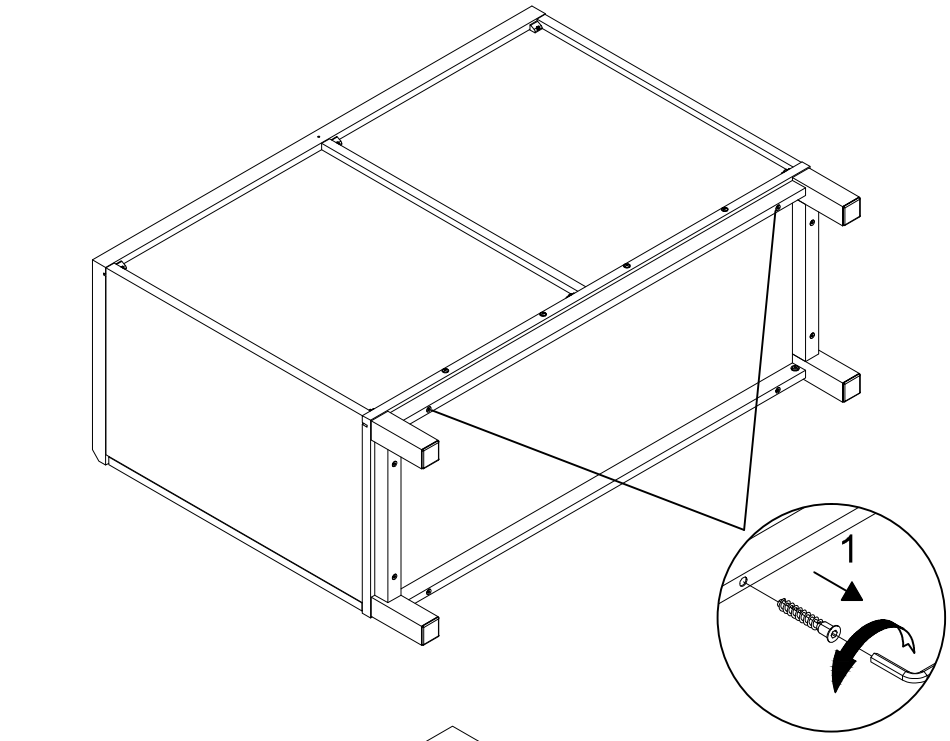

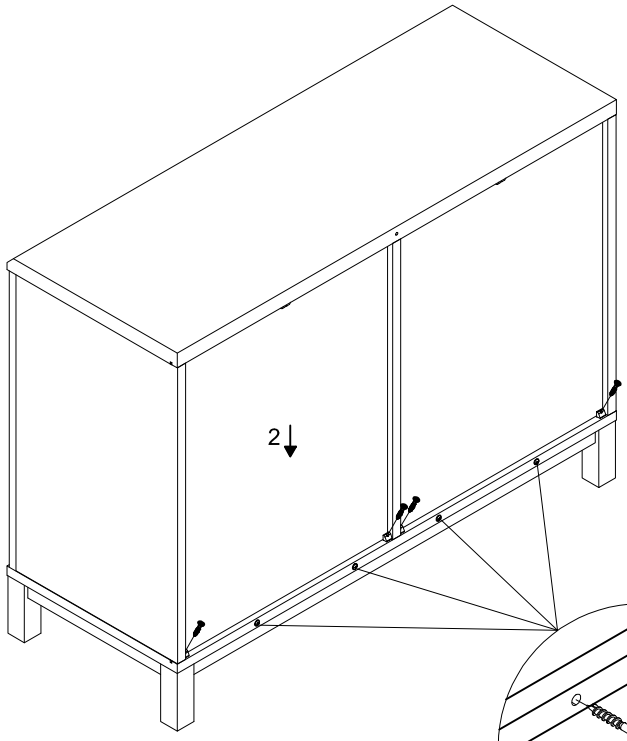

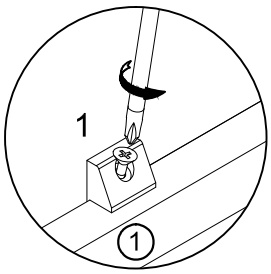

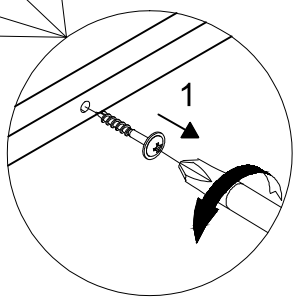

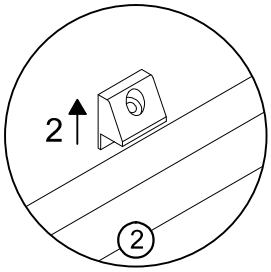

DISASSEMBLY



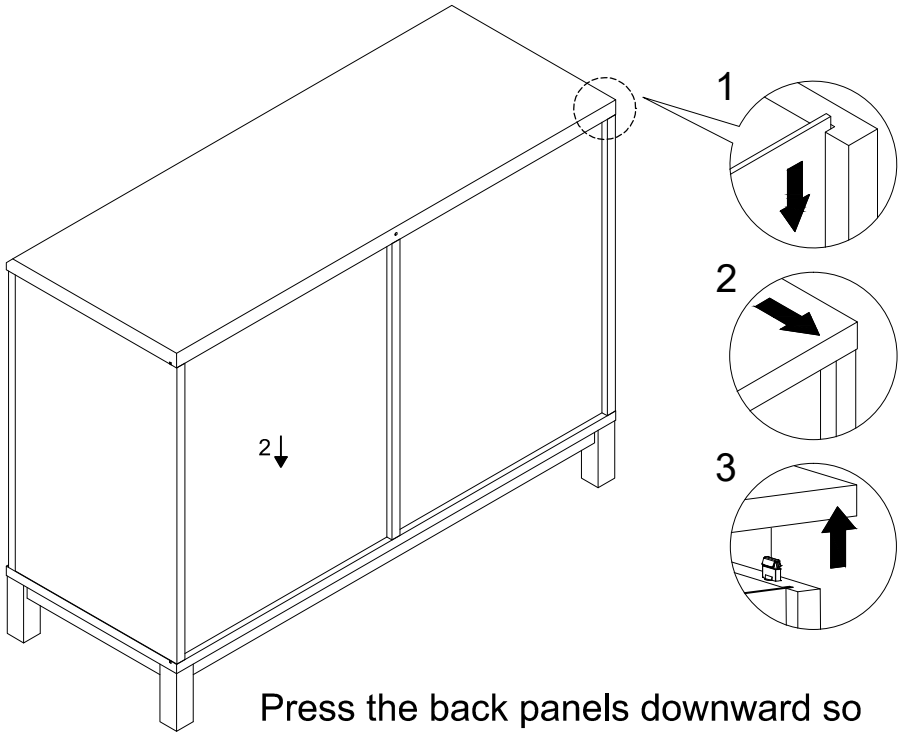

Press the back panels downward so that the top panel can be slide off.

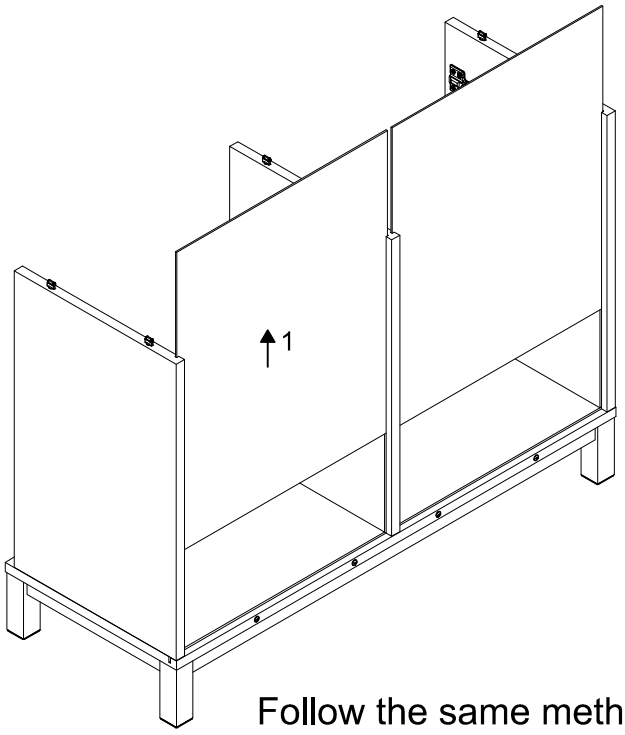

Follow the same method to release all the other panels.

Assembly instructions

Actual product size

H75.5 x W101 x D39cm

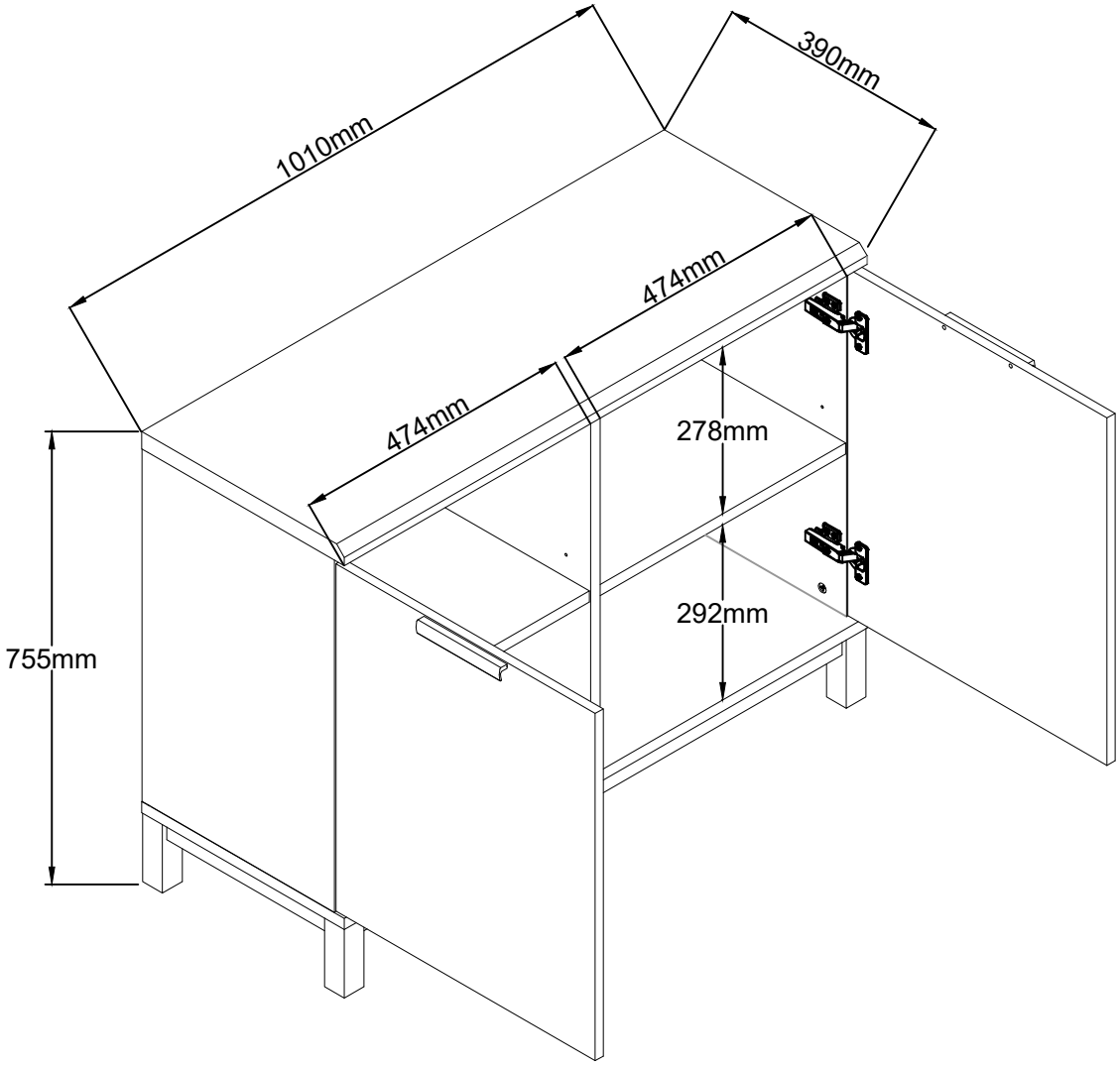

Warnings

We suggest you retain these instructions for future reference.

Assembly to be carried out by a competent adult only.

Keep fittings out of children's reach and keep children well away from construction area.

During assembly children should be kept away from the product due to possible risk of injury.

This product should only be used on firm level ground.

Please periodically check all fittings and re-tighten as necessary.

Please do not sit or stand on your furniture.

Avoid exposing the furniture to excessive heat or direct sunlight as this can cause deterioration of the colour.

Unwrap all packaging materials and place the components on top of the carton box or on a clean floor to protect it from damage

Wall Strap Provided. In order to prevent overturning, this product must be used with the wall attachment device provided.

Missing parts

If you are missing any fixtures and fittings for your product. Please contact our customer service team on 0333 777 8999 and they will be happy to arrange for a replacement to be sent to you free of charge.

Home service technicians

If you have a fault with your product, please contact our customer service team on 0333 777 8999.If you have had the product for 28 days or less you may be offered a replacement,refund or for a fully trained home service technician to visit your home to assess the fault and repair the product where possible.If you have had the product for more than 28 days we will send an independant home service technician to review and repair the product where possible and recommend further action.

You can write to us at

Home Customer Service
Next Retail Ltd.
Desford Road,
Leicester,
LE19 4AT

To view our full furniture range please visit www.next.co.uk