GREY BRONX CADDY

U51957

Assembly instructions

Actual product size

H62 × D20 × W16 cm

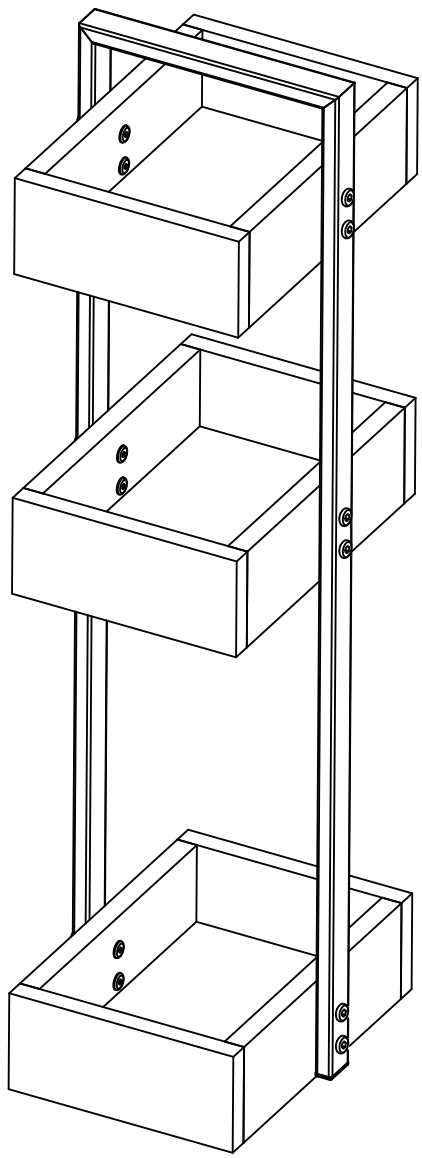

Need Help ?

With: Assembly instruction
Missing or damaged parts

CALL: 0333 777 8000

IMPORTANT - RETAIN FOR FUTURE REFERENCE

Produced in China for Next Retail Ltd.
U51957-2022-V1.

GREY BRONX CADDY

U51957

Assembly instructions

BEFORE YOU START

Warnings

We suggest you retain these instructions for future reference

Keep fittings out of children's reach and keep children well away from construction area.

This product should only be used on firm, level ground

Please periodically check all fittings and re-tighten as necessary

Please do not sit or stand on your table

Avoid exposing the furniture to excessive heat or direct sunlight as this can cause cracking of the wood and deterioration of the colour

Unwrap all packaging materials and place the components on top of the carton box or on a clean floor toprotect it from damage

Do's

We suggest you spend a short time reading through this leaflet before you start.

When you are ready to start, make sure that you have the right tools and plenty of space.

Unwrap all packaging materials and place the components on a clean surface to protect it from damage,

We recommend that the packaging is used to protect the surfaces during assembly.

Carefully check that you have all the parts before beginning assembly.

Due to the size of the product we recommend that it is assembled in the room intended for use.

Ensure the product is fully assembled as illustrated and all fixings fully tightened before use. Check fixings regularly to ensure they remain tight.

Wood will mellow and change colour over time, we recommend that ornaments and items placed on the surface are moved regularly for the first few months to prevent uneven mellowing.

Don'ts

When moving furniture never drag the pieces across the floor, as this will cause damage to the joints.

Apply Adhesive substrates for example, sticky tape to the product

Do not use silicone based furniture polish. Silicone in furniture polishes can break down the lacquer finish.

Number of people required to assemble

Two people are required to assemble this item

Time to assemble

EASY BUILD

Under 30 Minutes

Tools required

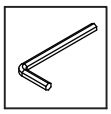

supplied

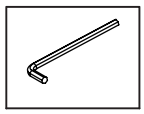

supplied

Missing parts

If you are missing any fixtures and fittings for your product. Please contact our customer service team on 0333 777 8000 and they will be happy to arrange for a replacement to be sent to you free of charge.

Home service technicians

If you have a fault with your product, please contact our customer service team on 0333 777 8000. If you have had the product for 28 days or less you may be offered a replacement, refund or for a fully trained home service technician to visit your home to assess the fault and repair the product where possible. If you have had the product for more than 28 days we will send an independant home service technician to review and repair the product where possible and recommend further action.

You can write to us at

Home Customer Services
Next Retail Ltd.
Desford Road,
Leicester,
LE19 4AT

To view our full furniture range please visit www.next.co.uk

Produced in China for Next Retail Ltd.
U51957-2022-V1.

GETTING TO KNOW YOUR PRODUCT

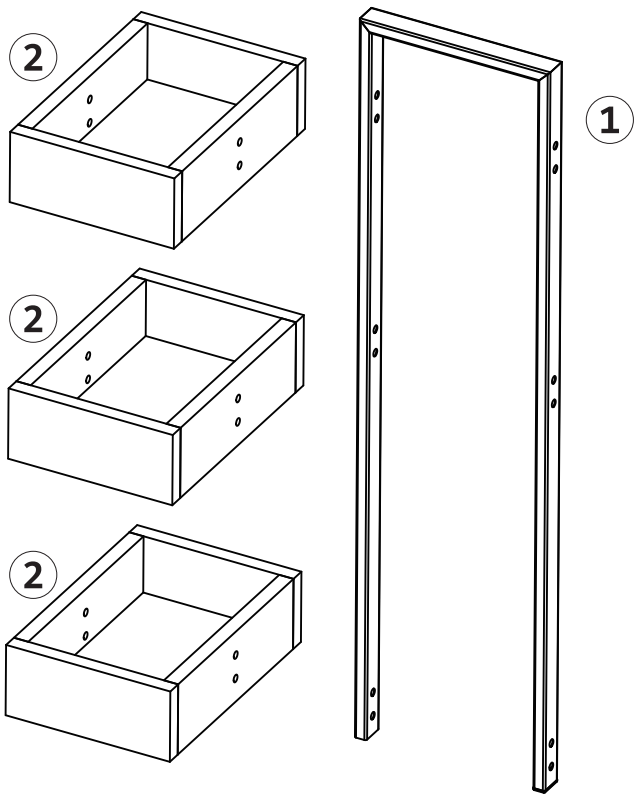

Components supplied. Please use this guide if you require replacement parts.

Ref	Dimensions	Visual	Qty	Ctn
1	615×20×160mm	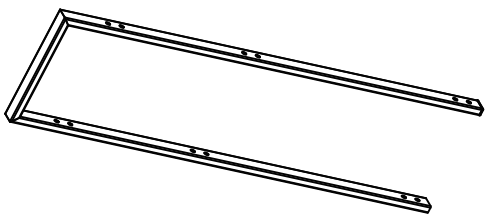	1	1
2	60×200×138mm	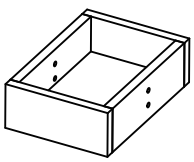	3	1

GREY BRONX CADDY

U51957

Assembly instructions

Fixtures and fittings supplied (actual size)

Ref	Dimensions	Qty	Extra Fittings
A	M5×10mm	12	2
B	M5×10mm	12	2

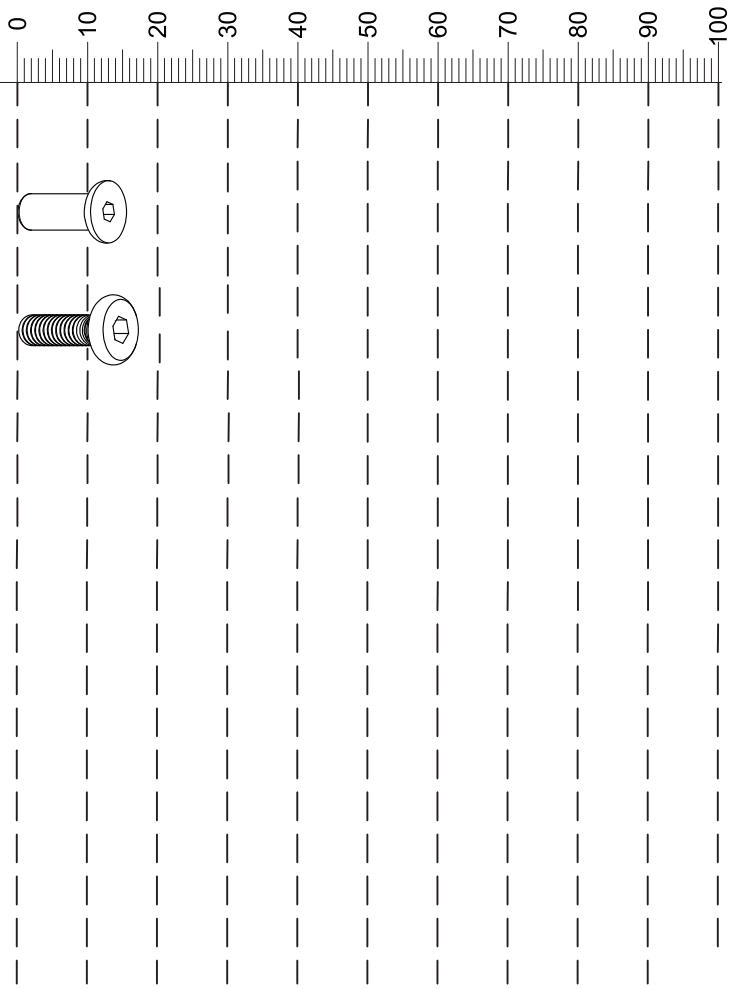

Fixtures and fittings supplied (not to scale)

Ref	Dimensions	Visual	Qty
C	S4		1
D	S3		1

GREY BRONX CADDY

U51957

Assembly instructions

1

▲ **DO NOT FULLY TIGHTEN SCREWS UNTIL ALL PIECES ARE IN POSITION.**

UNWRAP ALL PACKAGING MATERIALS AND PLACE THE COMPONENTS ON A CLEAN SURFACE TO PROTECT IT FROM DAMAGE.

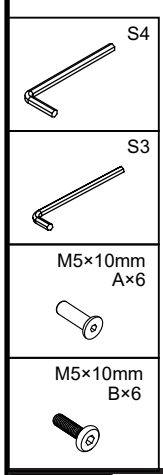

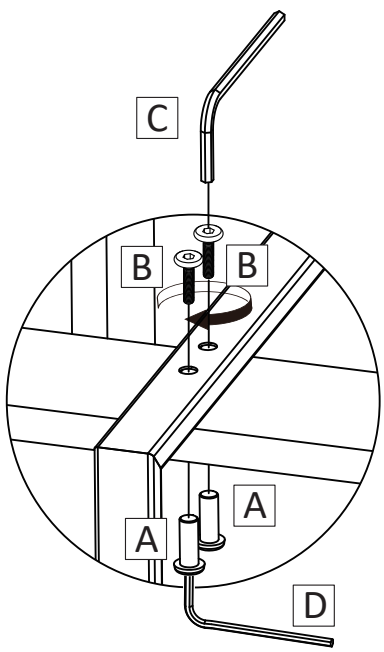

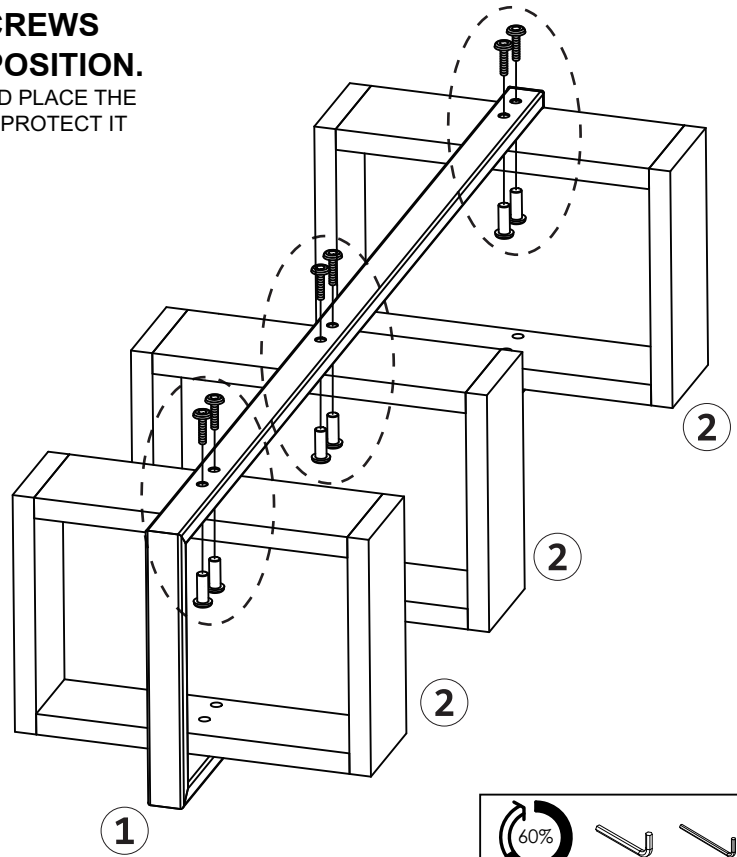

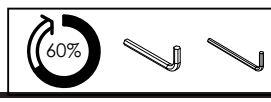

2

▲ **DO NOT FULLY TIGHTEN SCREWS UNTIL ALL PIECES ARE IN POSITION.**

UNWRAP ALL PACKAGING MATERIALS AND PLACE THE COMPONENTS ON A CLEAN SURFACE TO PROTECT IT FROM DAMAGE.

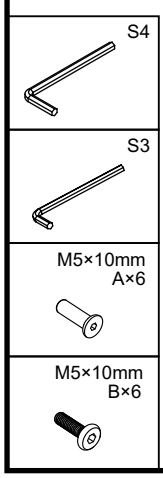

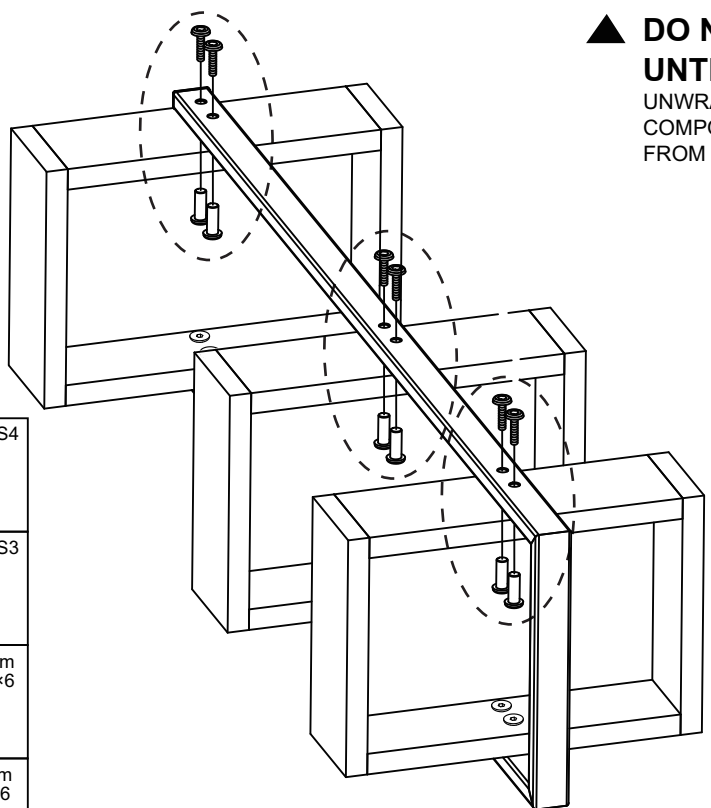

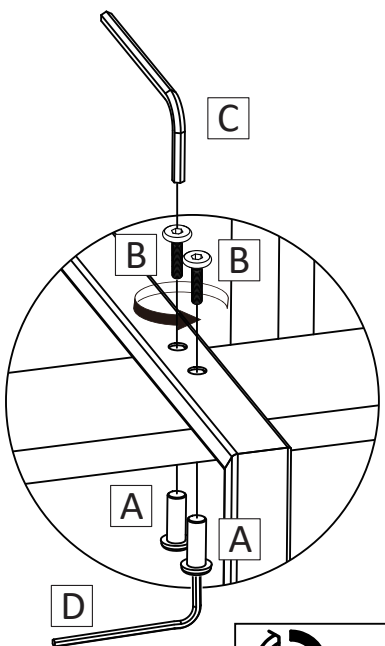

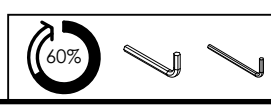

GREY BRONX CADDY

U51957

Assembly instructions

3

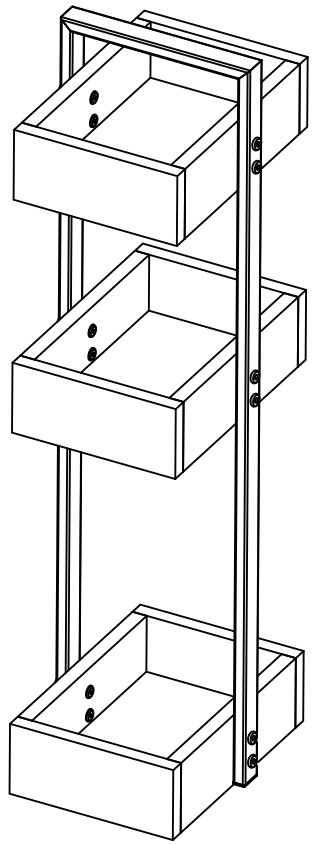

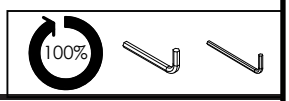

Actual product size
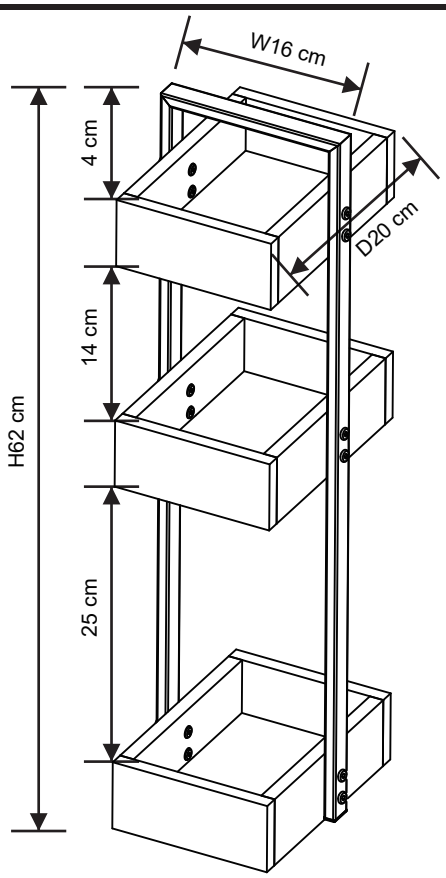
H62 × D20 × W16 cm