CHARLES BENTLEY
EST. 1860



snug

Hornbeam

Log Holder Fireside Companion Set

Assembly Instructions

Explore our elegant range of snug heating accessories for your home and outdoor space. Our range includes log buckets, companion sets, fireguards, chimineas, fire pits, electric heaters & more...

SCAN TO DISCOVER MORE...



snughomeware.co.uk

Charles Bentley & Son Ltd. Loughborough, LE11 5TP, UK

Join us on...

Hornbeam Log Holder
Fireside Companion Set

Assembly Instructions

Included in your box

A

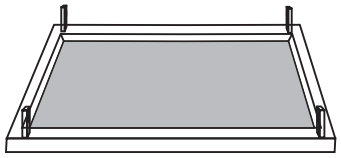

X 1

B



X 2



X 1



X 4

C

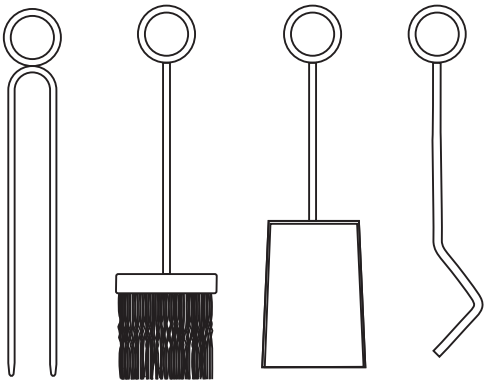

X 1 X 1 X 1 X 1

Assembly Instructions

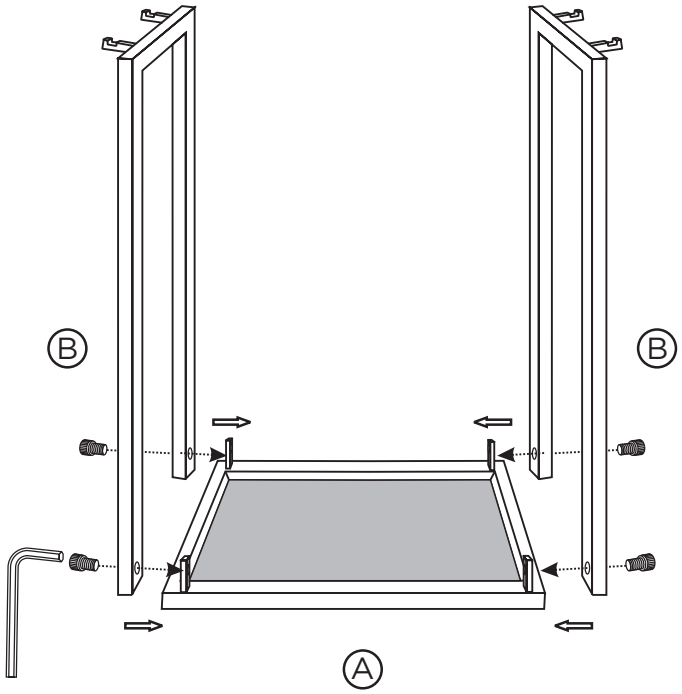

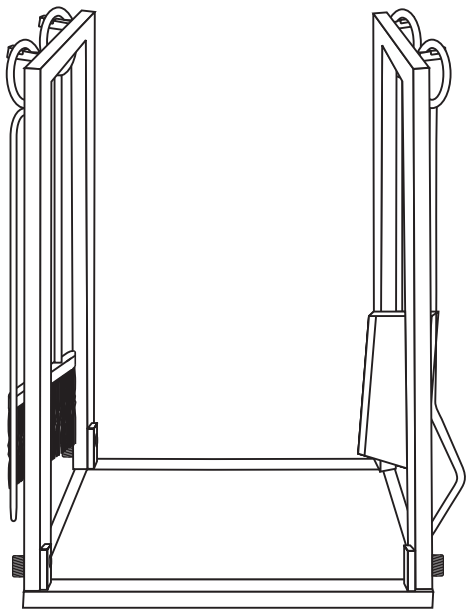

Complete

HMFIRESIDE46