SWOON

ZIGGY BEDSIDE TABLE

SFD21044MCHBF

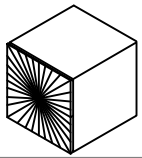	1 X CARCASE
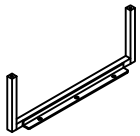	2 X LEG
	1 X ALLEN KEY 4MM
	6 X ALLEN BOLT 6X16MM
	6 X WASHER 18MM
	15 MIN

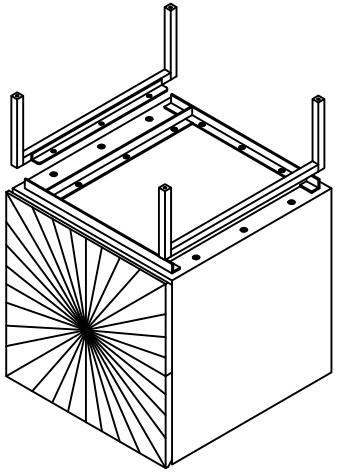

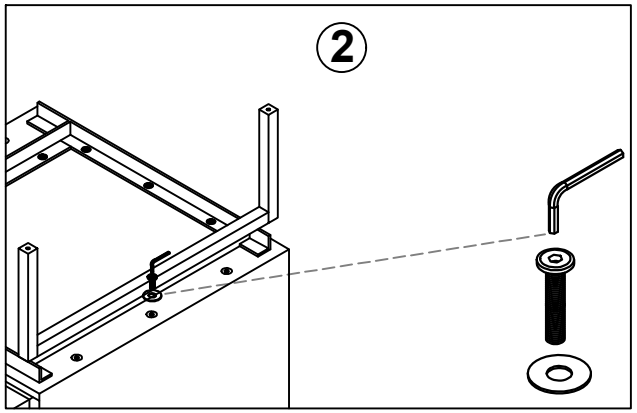

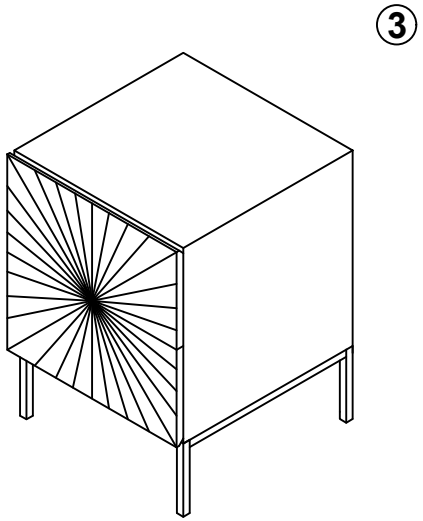

ASSEMBLED

NOTE : PLEASE ASSEMBLE ON A MAT OR CARPET