SWOON

Jackson Bedside

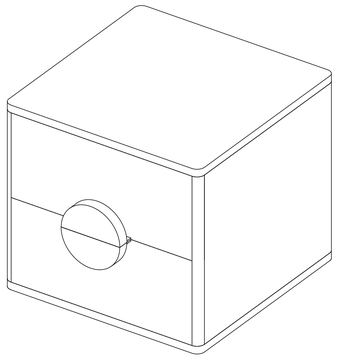

1 x Box

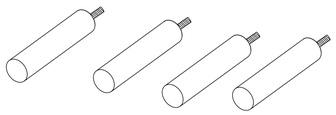

4 x Leg

" Important "

Use mat or carpet to assemble the product to avoid scratches.

1

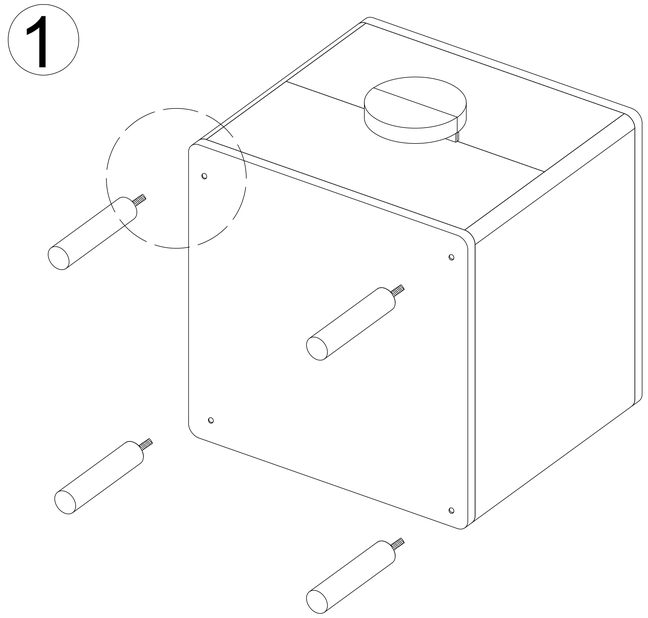

2

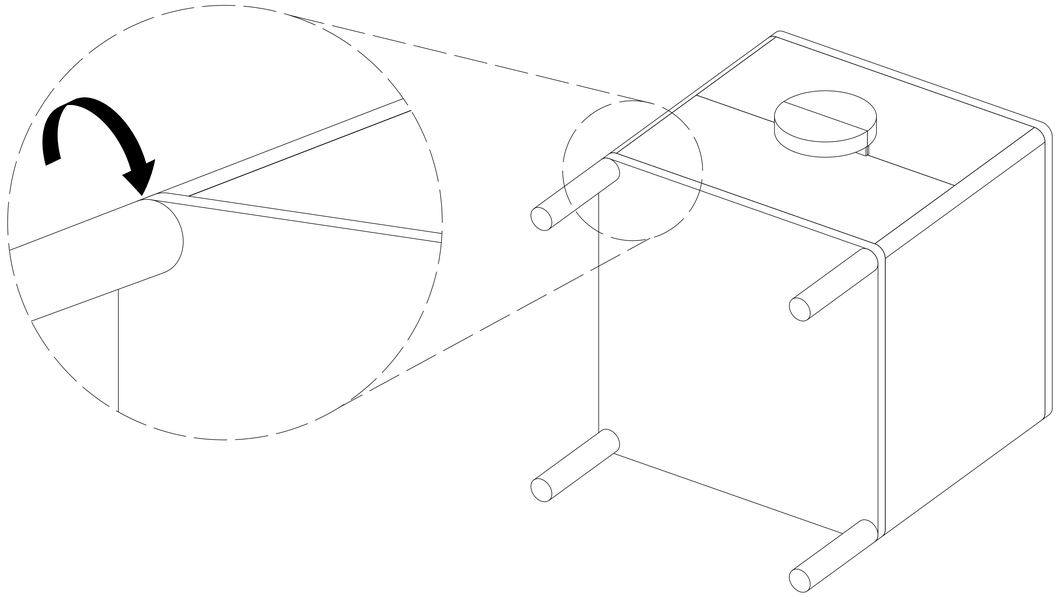
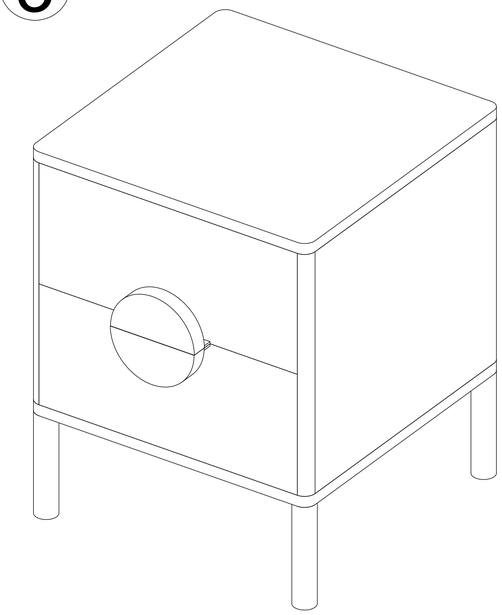
3