BEFORE YOU GET STARTED...

We're confident you'll love your gorgeous new Next furniture. However, it's worth making absolutely certain before you put it all together.
So, let's quickly run through these three steps:

1. COLOUR

Make sure you're happy with the colour
No need to unpack everything, just check the first component.

2. PROTECTIVE PACKAGING

If you're happy, then it's time to get opening! Start by laying everything out on the protective packaging – this will prevent anything getting scratched.

3. PARTS PAGE

Finally, double check you have all the pieces by referencing the parts page of the instructions.

TIPS FOR RETURNS

Not completely happy with the product? No problem.
We just need everything back in the original packaging, so follow the steps below and this will ensure a super-smooth returns process and no delay to your refund.

DO

- Check everything is there (the 'parts page' is a handy checklist).
- Pop all the loose fittings and fixtures into the packaging provided or tie them up in a plastic bag.
- Wrap all the big components back up in the original protective packaging.
- Close up the box and seal it securely (don't be afraid to use plenty of tape).

DON'T

- Leave anything assembled - all components should be dismantled and separately packed.
- Put loose fixtures and fittings straight into the box.
- Throw it back in the box carelessly – as it may get damaged.

NEXT HOME

Then just give us a call on 0333 777 8999 and we'll sort out a pick up time for you.

WREN STANDARD BED

W52817/W78578

Assembly instructions

Actual product size

Double W149cm X L211cm X H109cm
King W164cm X L221cm X H109cm
Super King W194cm X L221cm X H109cm

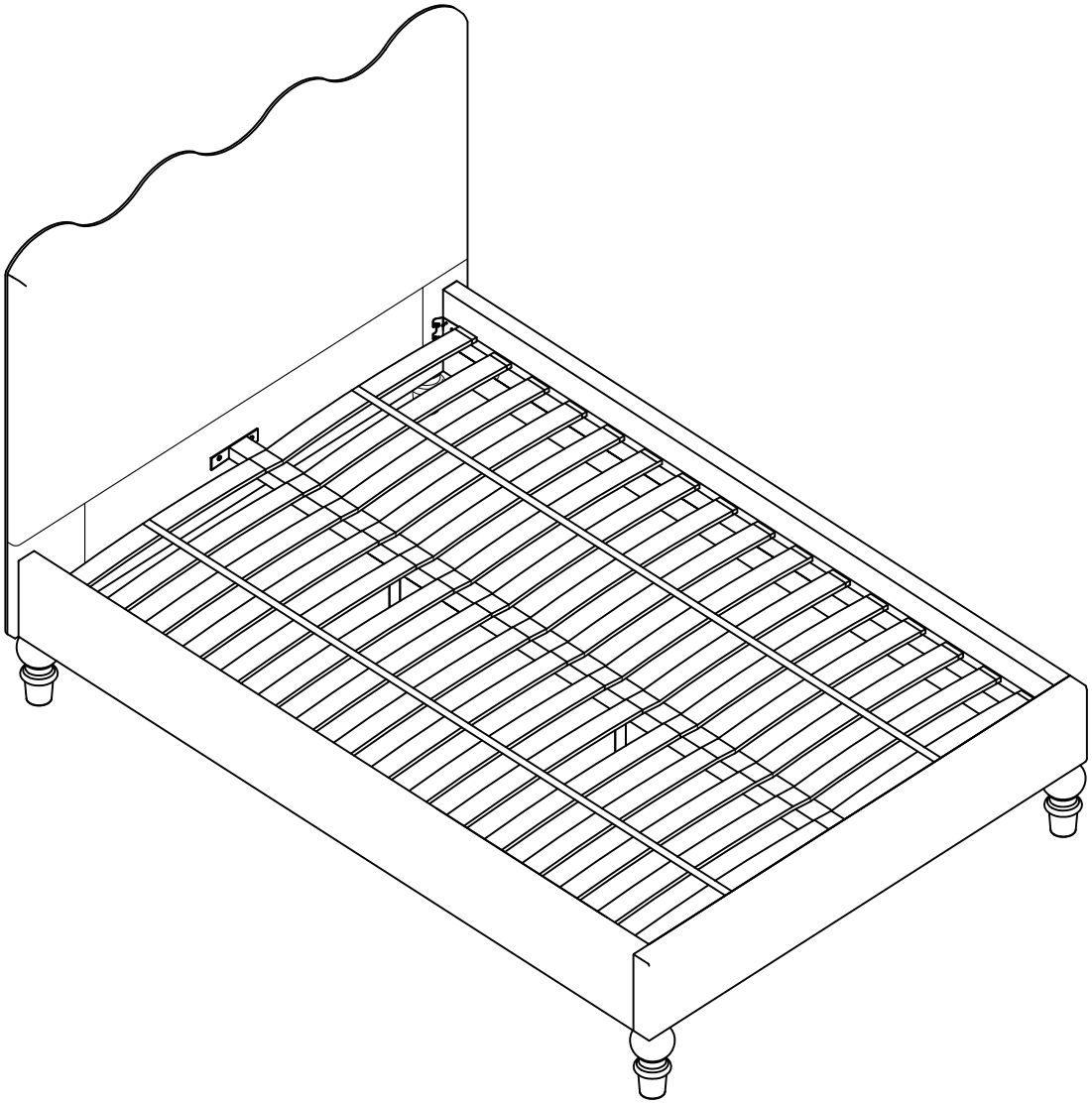

Item number	Fabric name	Fabric composition
W52817	Chunky Texture Oyster Natural	80% polyester + 4% acrylic + 16% cotton
W78578	Woven Stripe Black & White	95% polyester + 5% linen

IMPORTANT - RETAIN FOR FUTURE REFERENCE

Need Help?

With: Assembly Instructions
Missing or damaged parts
CALL: 0333 777 8999

Produced in China for Next Retail Ltd.
W52817/W78578-2025-V2

NEXT

WREN STANDARD BED

W52817/W78578

Assembly instructions

BEFORE YOU START

Warnings

We suggest you retain these instructions for future reference.

Keep fittings out of children's reach and keep children well away from construction area.

This product should only by used on firm level ground.

Please periodically check all fittings and re-tighten as necessary.

Please do not stand on your bed.

Avoid exposing the furniture to excessive heat or direct sunlight as this can cause damage to the materials and deterioration of the colour.

Do's

We suggest you spend a short time reading through this leaflet before you start.

When you are ready to start, make sure that you have the right tools, plenty of space.

Due to the size of this product we recommend that it is assembled in the room intended for use.

Unwrap all packaging materials and place the components on a clean surface to protect them from damage.

We recommend that the packaging is used to protect the surfaces during assembly.

Carefully check that you have all the parts before beginning assembly.

Ensure the product is fully assembled as illustrated and all fixings are fully tightened before use. Check fixings regularly to ensure they remain tight.

When moving the assembled bed, remove mattress, and lift the bed. Do not drag the bed, as this can cause structural damage. Please check that the centre support rail is securely fixed in place.

When adjusting the support legs ensure that the foot is set 5mm from the floor surface without the mattress in place. When in use the legs will create the required support for the product.

Never allow any kind of liquid to remain on your furniture. Absorption can cause materials to warp or finishes to de-laminate.

To clean your item, please use a vacuum or lightly brush clean.Never allow any kind of liquid to remain on your furniture.Absorption can cause finishes to de-laminate.

Don'ts

Do not tighten screws until fully assembled.

Do not over tighten screws or bolts.

Do not drag or pull your furniture.

Do not use this product if parts are missing, damaged or worn.

Never use scourers, abrasives or chemical cleaners.

Number of people required to assemble

Two people are required to assemble this item

Time to assemble :1.5 hours

Tools required

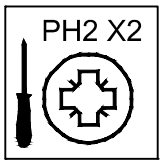

not supplied

Missing parts

If you are missing any fixtures and fittings for your product please contact our customer service team on 0333 777 8999 and they will be happy to arrange for a replacement to be sent to you free of charge.

Home service technicians

If you have a fault with your product please contact our customer service team on 0333 777 8999. If you have had the product for 28 days or less you may be offered a replacement,refund or for a fully trained home service technician to visit your home to assess the fault and repair the product where possible.
If you have had the product for more than 28 days we will send an independent home service technician to review and repair the product where possible and recommend further action.

You can write to us at

Home Customer Services
Next Retail Ltd,
Desford Road,
Leicester,
LE19 4AT,

To view our full furniture range please visit www.next.co.uk

Produced in China for Next Retail Ltd.

W52817/W78578-2025-V2

WREN STANDARD BED

W52817/W78578

NEXT

Assembly instructions

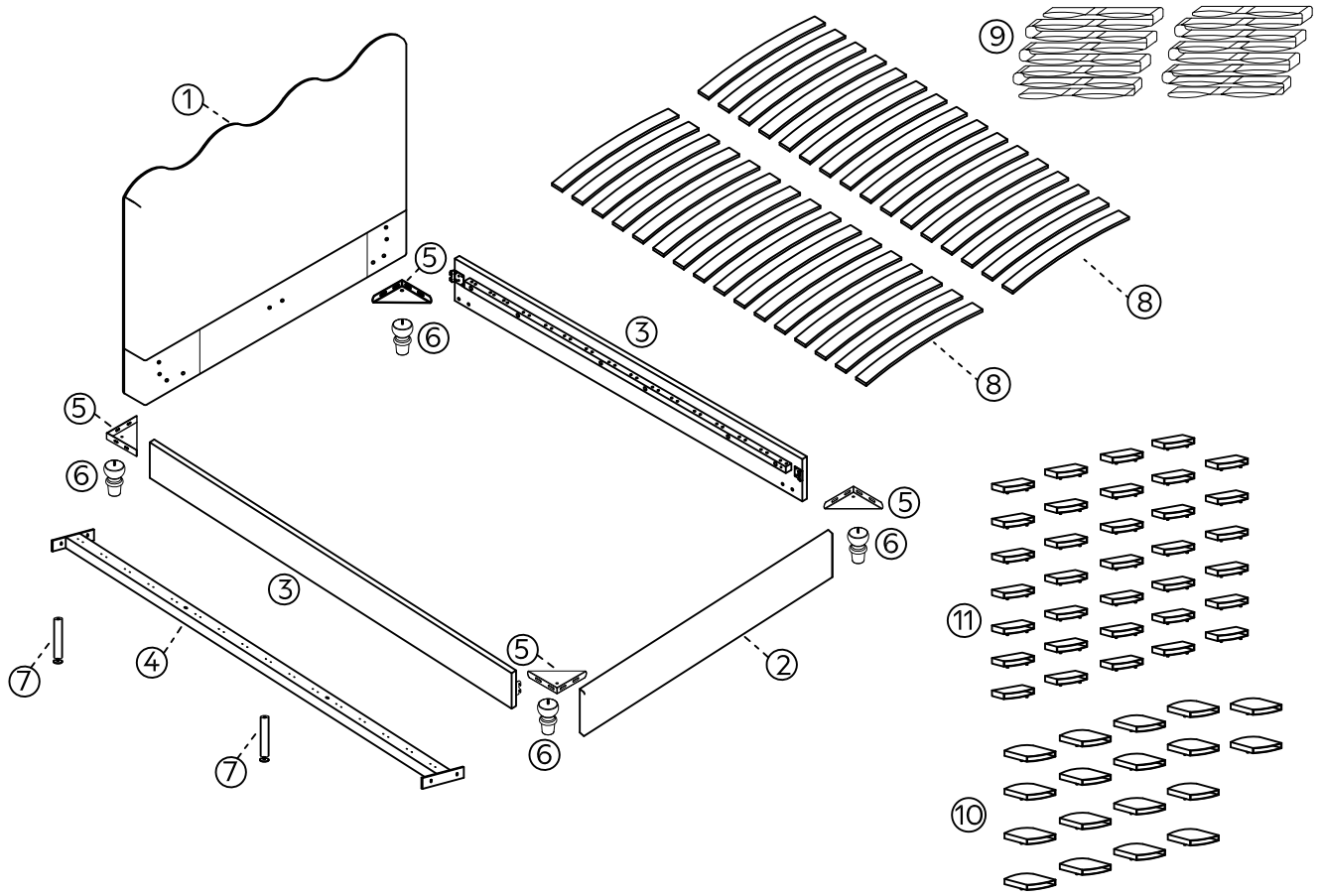

Components supplied. Please use this guide if you require replacement parts.

Ref	Dimensions	Visual	Qty	Ctn
1	Headboard Double 149x94.5cm King 164x94.5cm Super King 194x94.5cm		1	1
2	Footboard Double 143x21cm King 158x21cm Super King 188x21cm		1	2
3	Side Rails Double 192x20.5cm King 202x20.5cm Super King 202x20.5cm		2	2
4	Center Rail Double 191.9x2.5cm King 201.9x2.5cm Super King 201.9x2.5cm		1	2
5	Brackets (17.5x17.5x3.9cm)		4	2

Ref	Dimensions	Visual	Qty	Ctn
6	Feet (Ø9x14.5cm)		4	2
7	Support legs (Ø1.9x25cm)		2	2
8	Slats Double 67.7x6cm King 75.2x6cm Super King 90.4x6cm		Double 30 King 32 Super King 32	3
9	Belts for slat		2	2
10	Centre Plastic Cap (Big)		Double 17 King 18 Super King 18 (2pcs spare part included)	2
11	End Plastic Cap (Small)		Double 32 King 34 Super King 34 (2pcs spare part included)	2

Produced in China for Next Retail Ltd.

W52817/W78578-2025-V2

WREN STANDARD BED

W52817/W78578

Assembly instructions

Ref	Dimensions	Qty
WLG130	M8x25mm	8
WBS12	M5x90mm	2
WLG108	M8x25mm	22
WDP22	M8x19mm	26
WDP23	M8	8
WBS13	Ø13	2
WLM24	M8	4
WDP17	Ø50x3.5mm	4

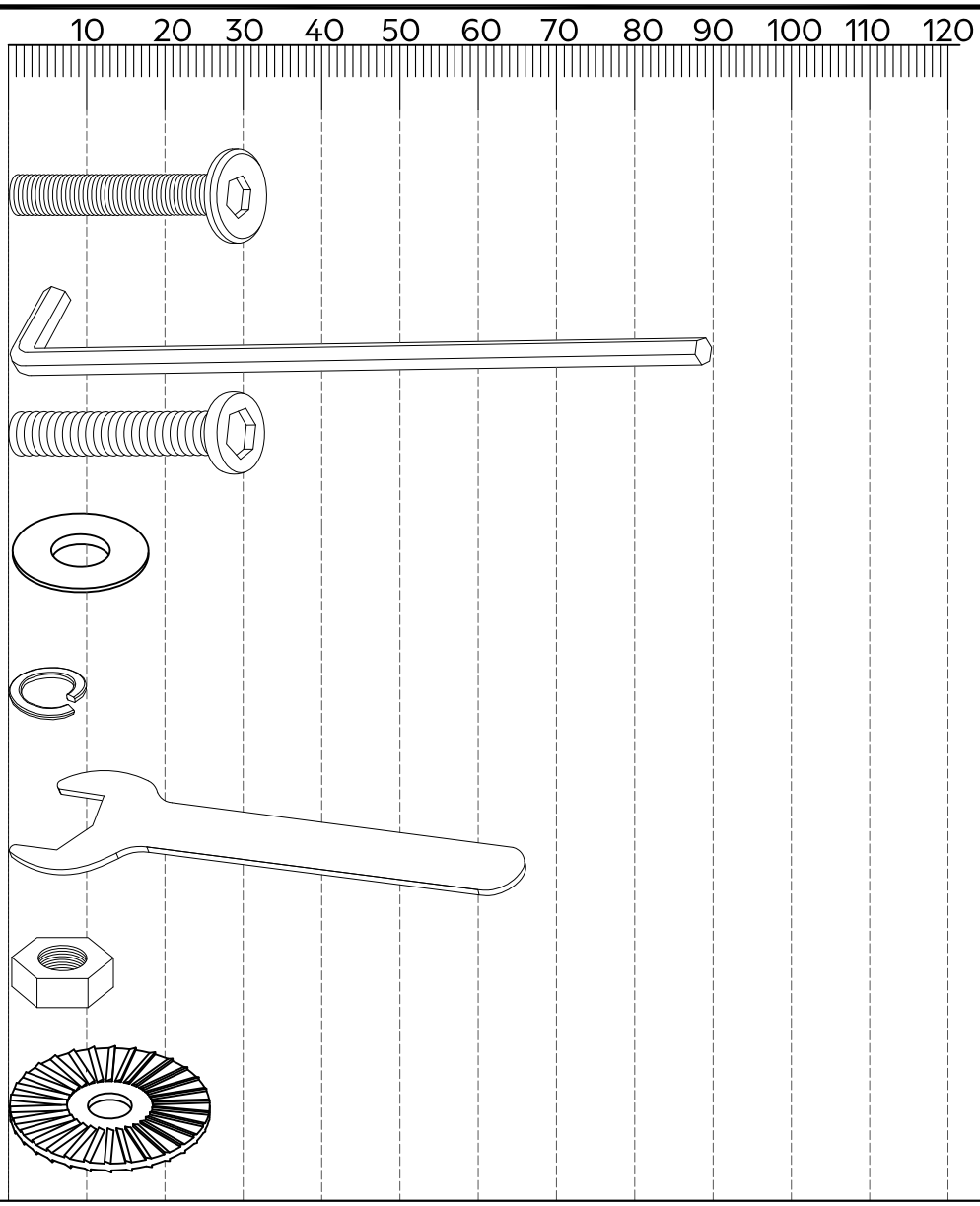

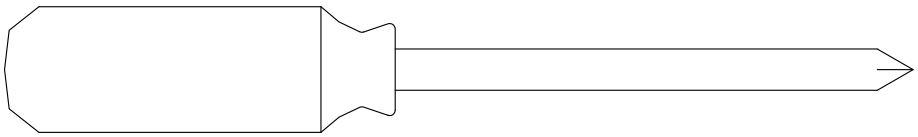

PH2x2 NOT SUPPLIED

Produced in China for Next Retail Ltd.

W52817/W78578-2025-V2

WREN STANDARD BED

W52817/W78578

NEXT

Assembly instructions

1 x4

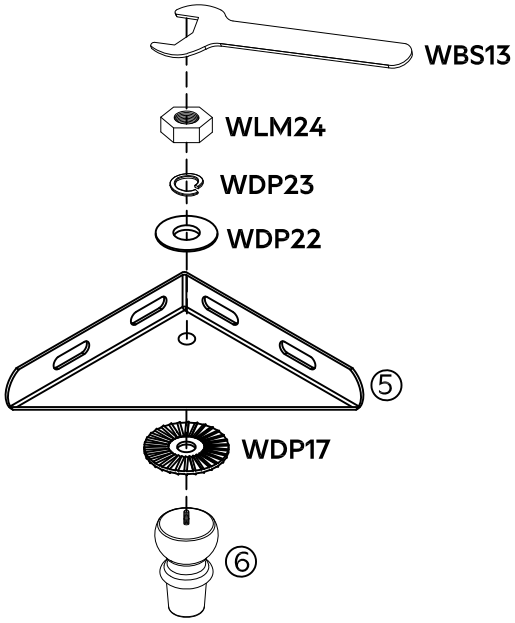

WDP22x4 M8x19mm	**WDP23x4** M8	**WLM24x4** M8	**WBS13x2** Ø13	**WDP17x4** Ø50x3.5mm

2

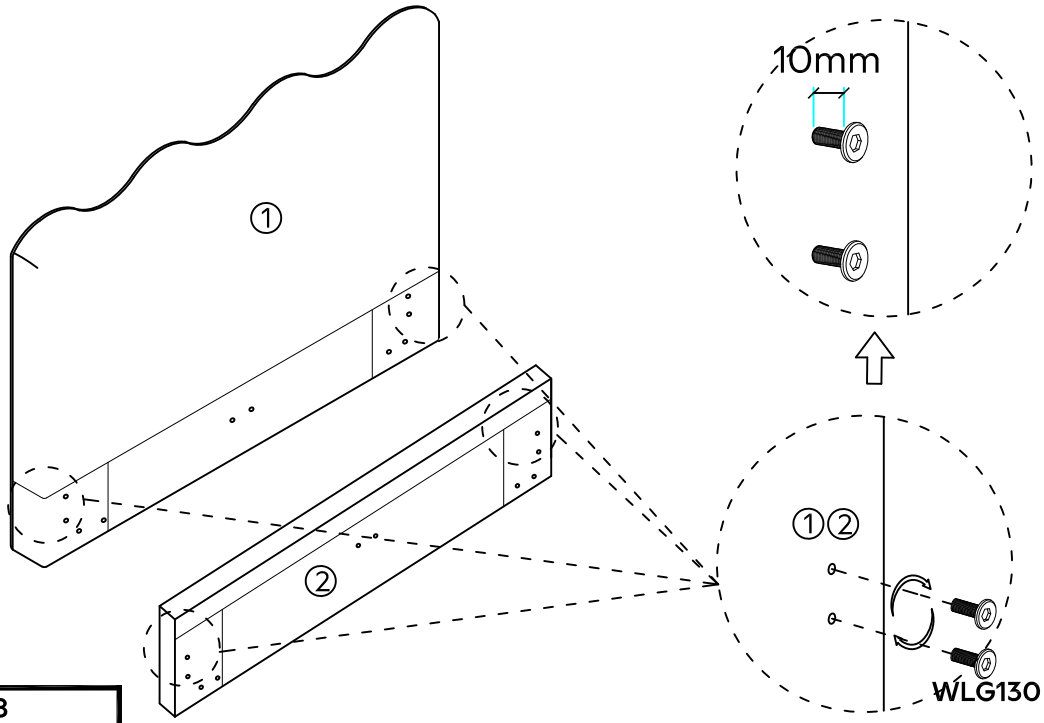

WLG130x8
M8x25mm

Produced in China for Next Retail Ltd.

W52817/W78578-2025-V2

Assembly instructions

3

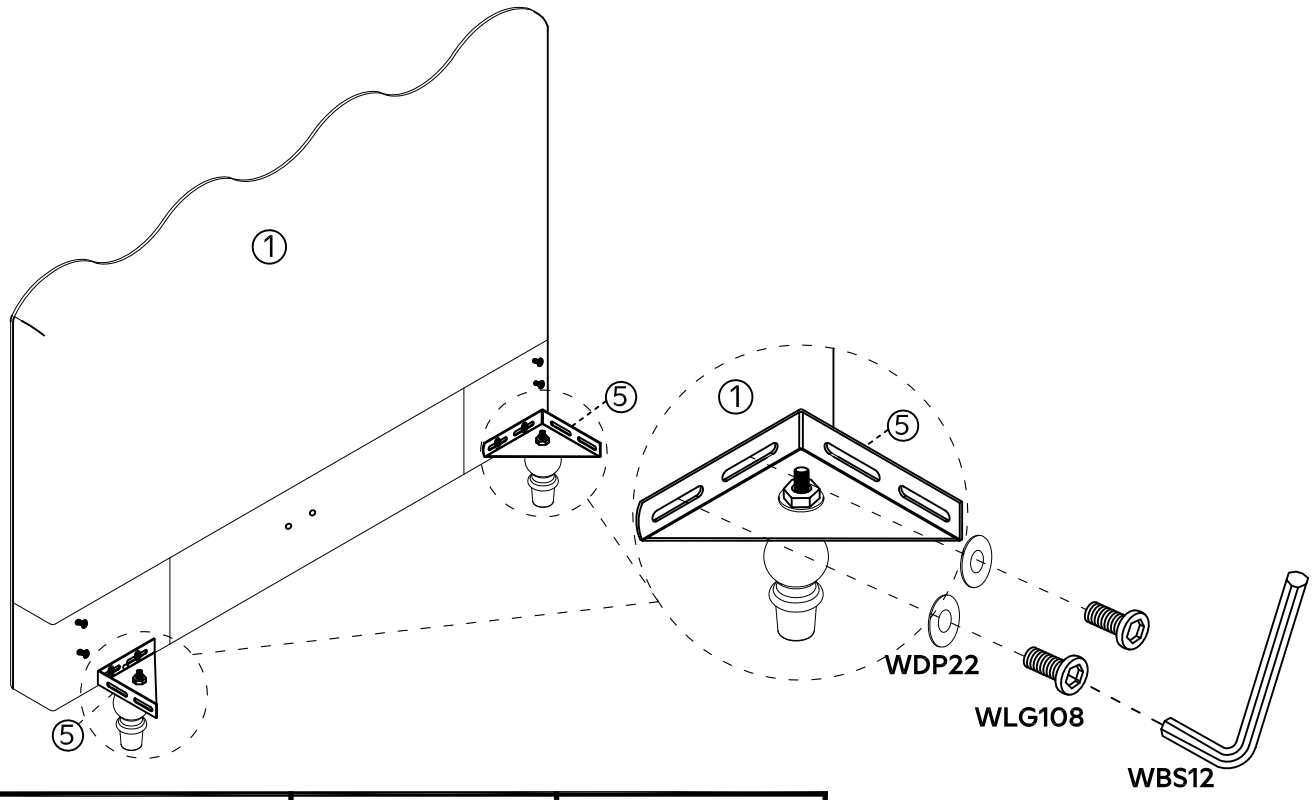

WBS12x2 M5x90mm	**WLG108x4** M8x25mm	**WDP22x4** M8x19mm

4

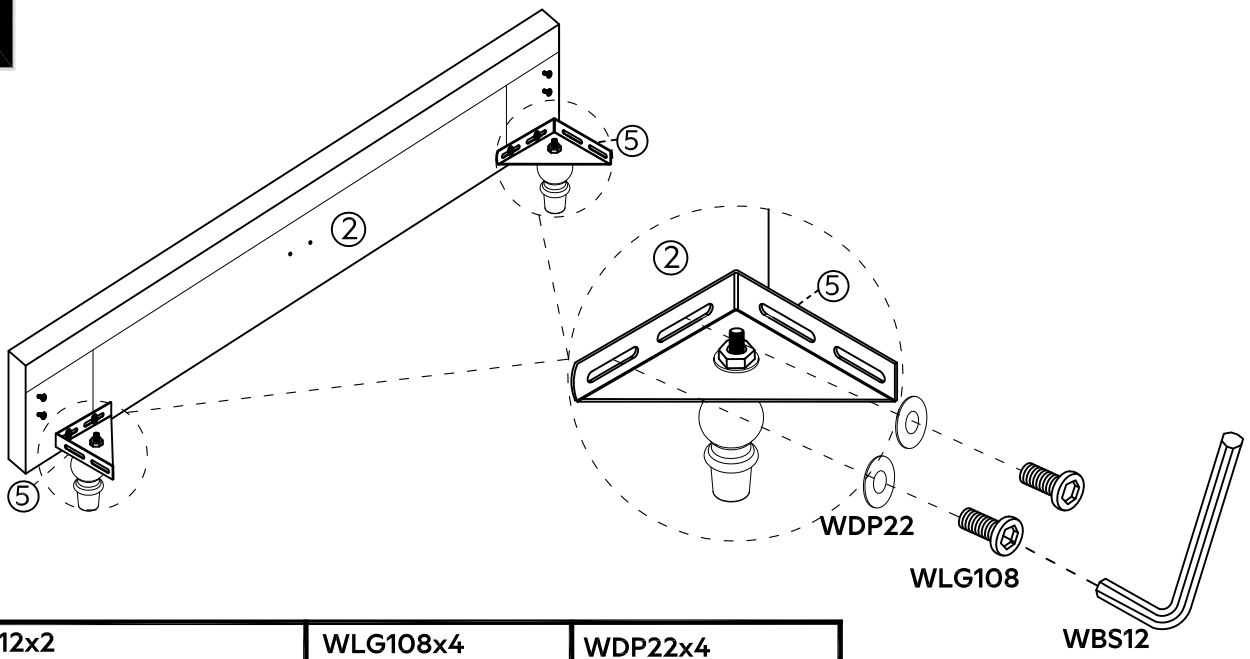

WBS12x2 M5x90mm	**WLG108x4** M8x25mm	**WDP22x4** M8x19mm

Produced in China for Next Retail Ltd.

W52817/W78578-2025-V2

5

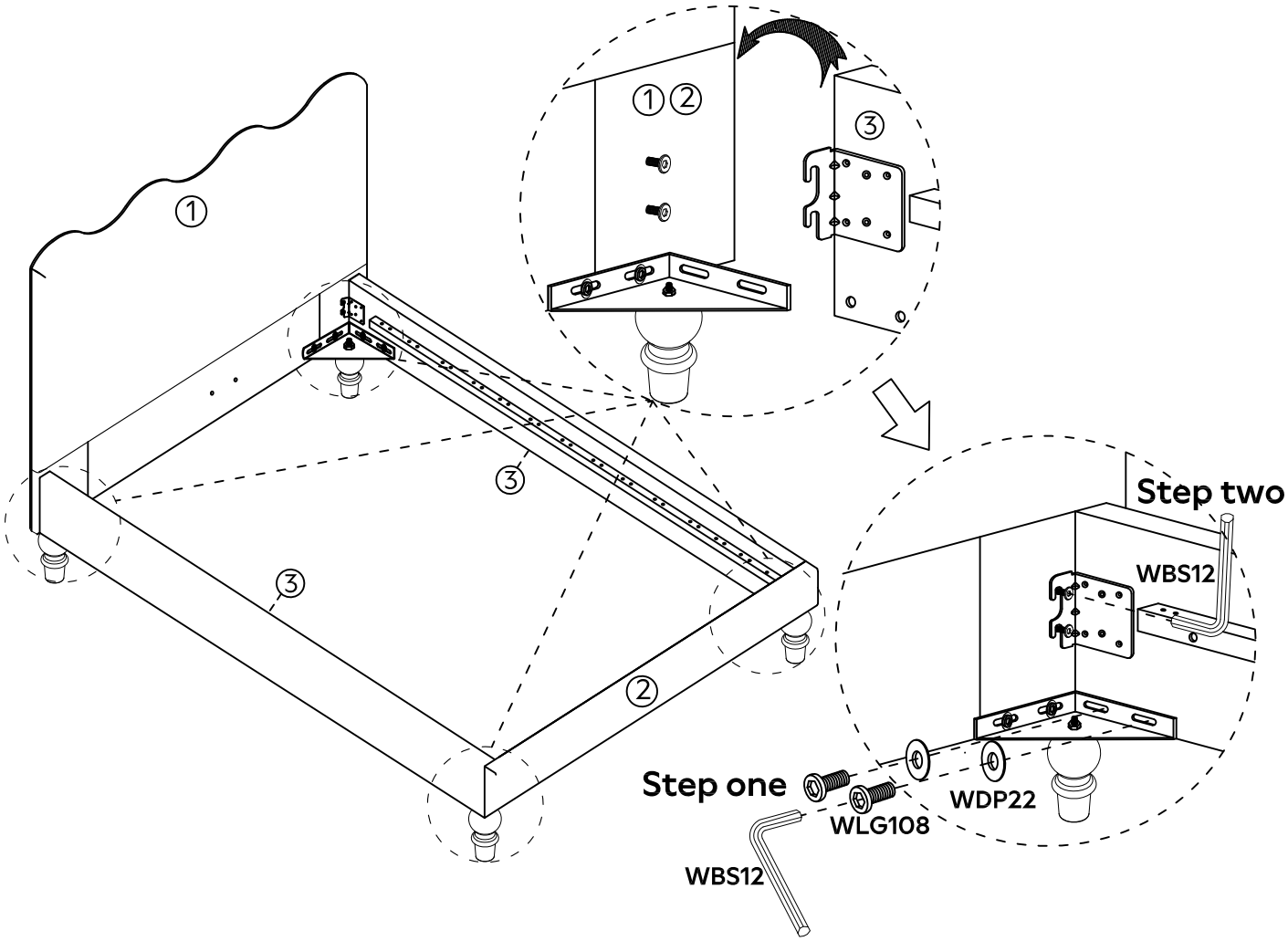

WBS12x2 M5x90mm	**WLG108x8** M8x25mm	**WDP22x8** M8x19mm

Produced in China for Next Retail Ltd.

W52817/W78578-2025-V2

WREN STANDARD BED

W52817/W78578

NEXT

Assembly instructions

6

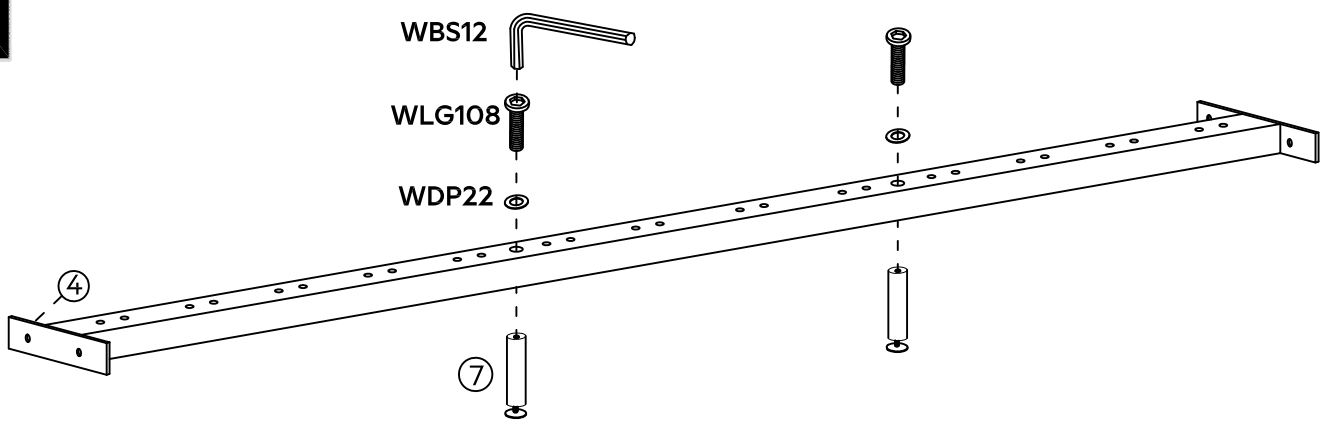

WBS12x2	WLG108x2	WDP22x2
M5x90mm	M8x25mm	M8x19mm

7

Fully tighten all the bolts at this stage.

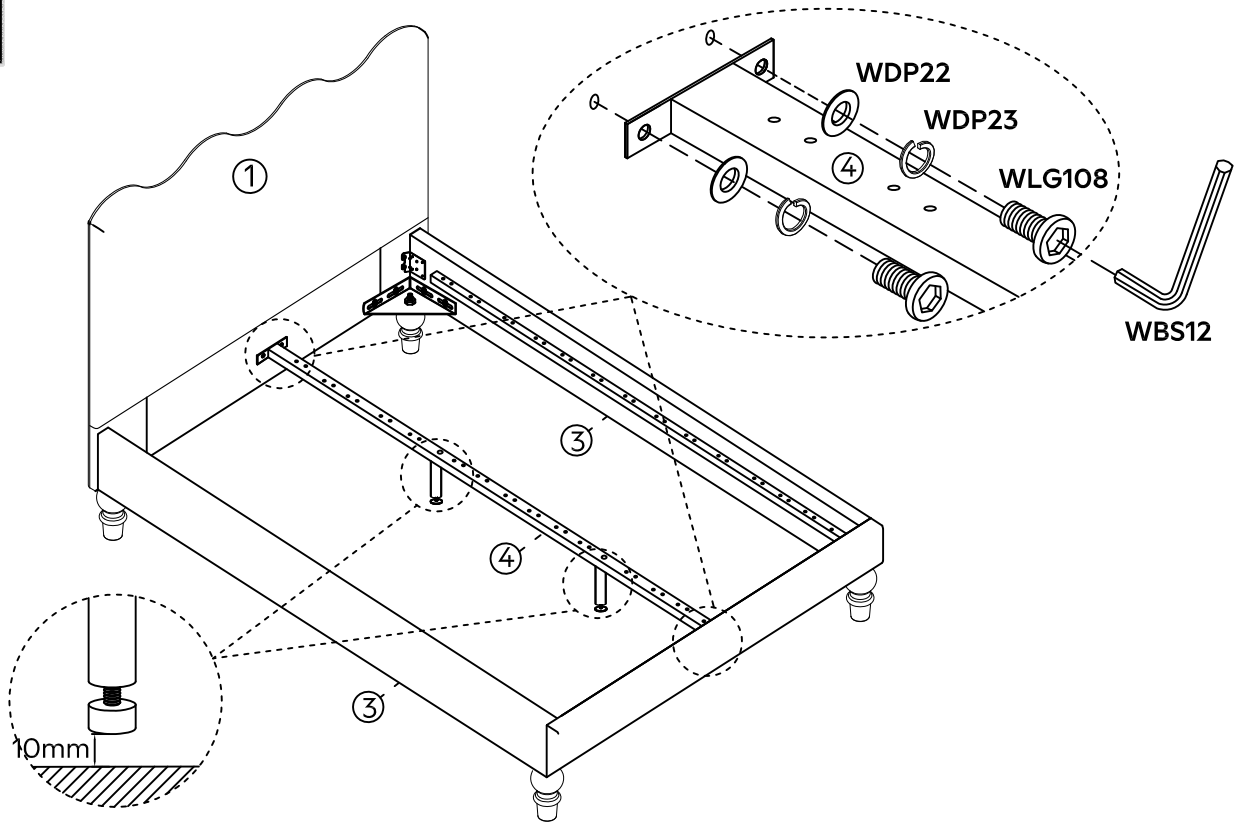

WBS12x2	WLG108x4	WDP22x4	WDP23x4
M5x90mm	M8x25mm	M8x19mm	M8

Produced in China for Next Retail Ltd.

W52817/W78578-2025-V2

8

Periodically check the condition of your bed slats and plastic locating caps to ensure they are in good condition and have not become loose.

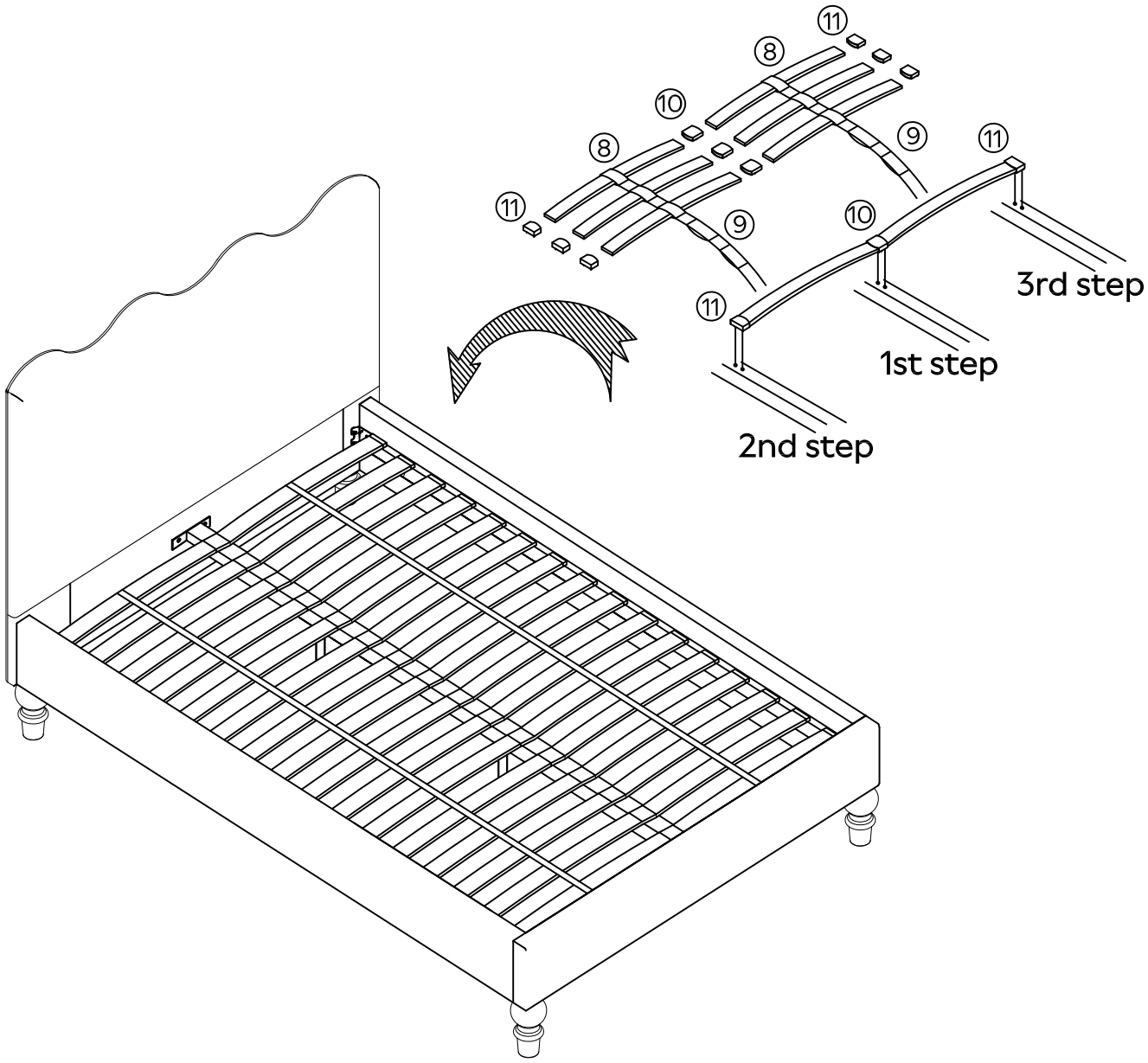

Warning: When you need to move the bed, please lift it, do not drag it.

Produced in China for Next Retail Ltd.

W52817/W78578-2025-V2

WREN STANDARD BED

W52817/W78578

Overall Dimensions (WxLxH cm)		Internal Dimensions (WxL cm)
Double:	149 x 211 x 109/35.5	137 x 192
King:	164 x 221 x 109/35.5	152 x 202
Super King:	194 x 221 x 109/35.5	182 x 202

Delivery Box Sizes (HxWxD cm)

	Double	King	Super King
Box1	13x154x98	13x169x98	13x199x98
Box2	15x238x25	15x248x25	15x248x25
Box3	13x71x18	13x79x20	13x94x23

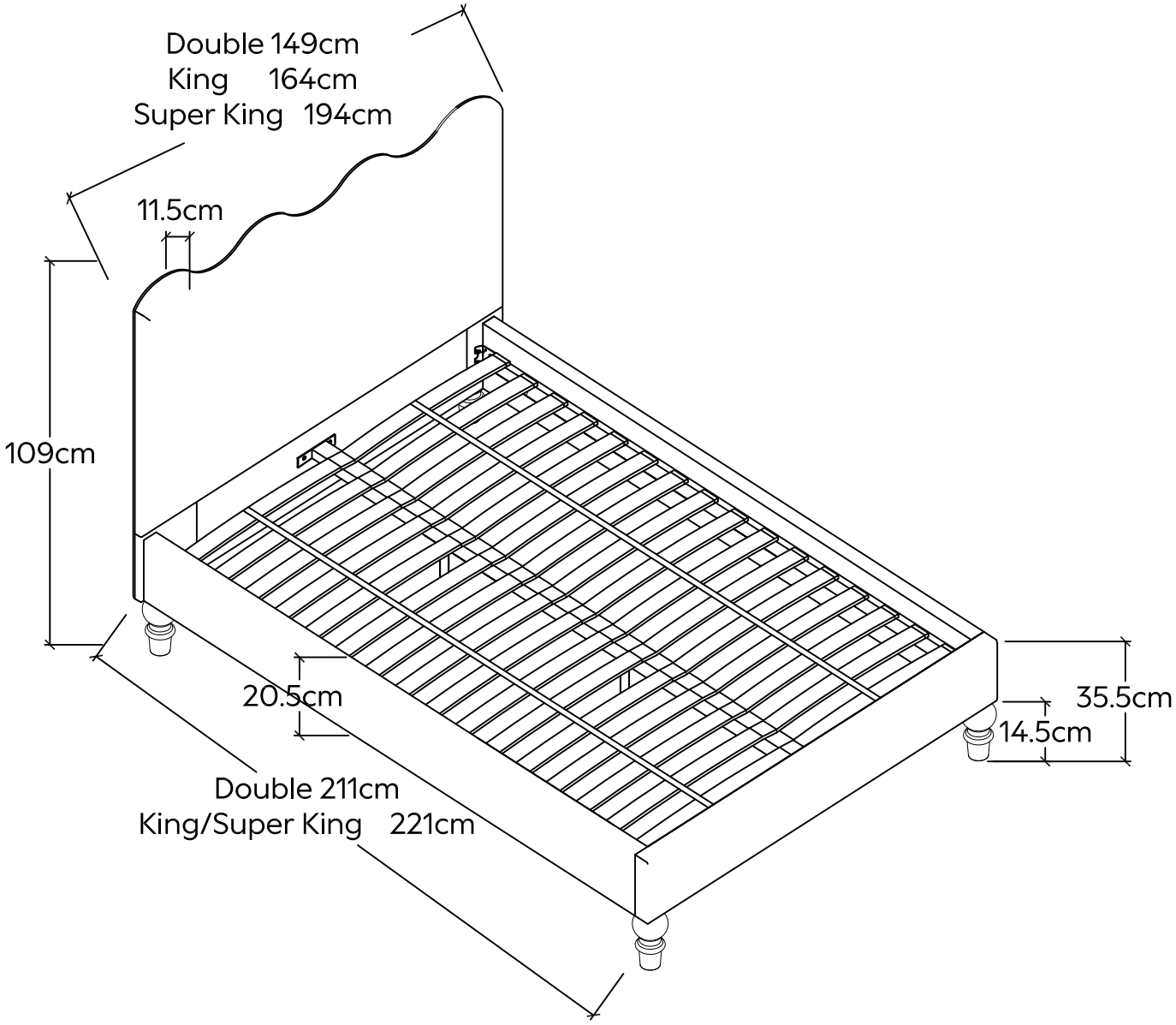

Produced in China for Next Retail Ltd.

W52817/W78578-2025-V2