umbra

**ZEN 1" ROD SET**
**32-128 in (81.3-325.1 cm)**
**umbra.com**

1

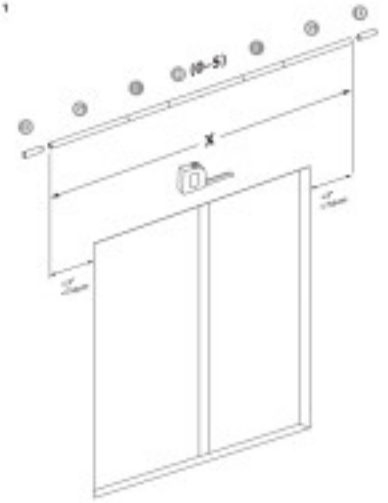


| X - length of covering (inches) \ Tubes Qty | Ⓒ | Ⓓ | Ⓔ |
|---|---|---|---|
| X = 32"(81.3 cm) | 2 | 0 | 0 |
| X = 40"(101.6 cm) | 2 | 0 | 1 |
| X = 48"(121.9 cm) | 2 | 1 | 0 |
| X = 56"(142.2 cm) | 2 | 1 | 1 |
| X = 64"(162.6 cm) | 2 | 2 | 0 |
| X = 72"(182.9 cm) | 2 | 2 | 1 |
| X = 80"(203.2 cm) | 2 | 3 | 0 |
| X = 88"(223.5 cm) | 2 | 3 | 1 |
| X = 96"(243.8 cm) | 2 | 4 | 0 |
| X = 104"(264.2 cm) | 2 | 4 | 1 |
| X = 112"(284.5 cm) | 2 | 5 | 0 |
| X = 120"(304.8 cm) | 2 | 5 | 1 |
| X = 128"(325.1 cm) | 2 | 5 | 2 |

2

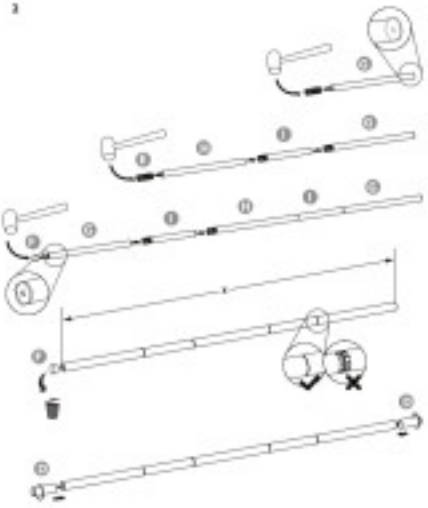

3

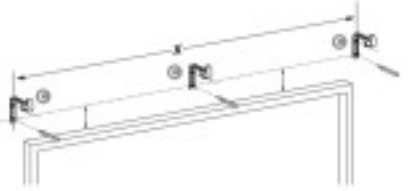

4

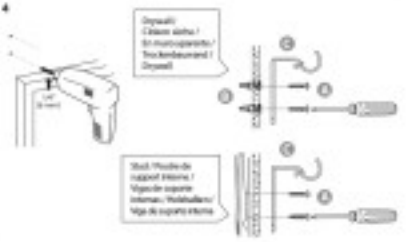

5

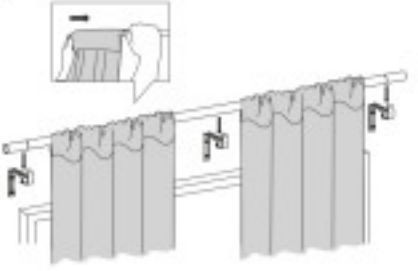
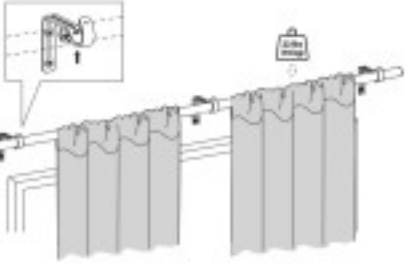
6